Nice

MC424L

Control unit

EN - Instructions and warnings for installation and use

Nice

Otomatik Kapı Türkiye | Teknik destek: 0212 505 57 58
www.otomatikkapiturkiye.com.tr
Nice teknik dokümanı - Site bağlantısı Otomatik Kapı Türkiye tarafından eklenmiştir.

ENGLISH

Translation of the original instructions in full

CONTENTS

1 GENERAL SAFETY WARNINGS AND PRECAUTIONS 2
2 PRODUCT DESCRIPTION AND INTENDED USE. 3
2.1 List of control unit parts 3
3 INSTALLATION. 4
3.1 Pre-installation checks. 4
3.2 Product usage limits 4
3.3 Product identification and overall dimensions. 4
3.4 Typical installation 4
3.5 Installing the control unit 5
4 ELECTRICAL CONNECTIONS 5
4.1 Preliminary checks. 5
4.2 Wiring diagram and description of connections 6
4.2.1 Wiring diagram 6
4.2.2 Description of connections 7
4.2.3 Operations for connection 7
4.2.4 Notes on connections 8
4.2.5 ALT (STOP) input type 8
4.3 Initial start-up and electrical connections test 9
4.4 Motor selector 10
4.5 Automatic limit switch search and “STOP” input acquisition 10
5 TESTING AND COMMISSIONING 11
5.1 Testing 11
5.2 Commissioning 11
6 PROGRAMMING 11
6.1 Using the programming buttons 11
6.2 Pre-set functions 12
6.3 Level 1 programming (ON-OFF) 12
6.3.1 Level 1 programming procedure 12
6.4 Level 2 programming (adjustable parameters). 13
6.4.1 Level 2 programming procedure 13
6.5 Memory deletion 15
6.6 Memorising the transmitters 15
6.6.1 Procedure for memorising transmitter buttons 15
6.6.2 Number of transmitters that can be memorised 15
6.6.3 Transmitter memorisation and deletion procedures . . . 15
6.7 LOCKING AND UNLOCKING THE MEMORY 17
7 TROUBLESHOOTING... (troubleshooting guide) 17
7.1 Signalling through warning light 17
7.2 Signals on the control unit 18
7.3 Maintenance notification 19
7.4 Anomaly log 19
8 FURTHER INFORMATION (Accessories). 20
8.1 Connecting an SM-type radio receiver 20
8.2 Connecting the IBT4N interface 20
8.3 Connecting the PS124 back-up battery 20
8.4 Connecting the Solemyo system 21
9 PRODUCT MAINTENANCE 21
10 PRODUCT DISPOSAL 21
11 TECHNICAL SPECIFICATIONS. 22
12 CONFORMITY 22
INSTRUCTIONS AND WARNINGS FOR THE USER 23

1 GENERAL SAFETY WARNINGS AND PRECAUTIONS

Prior to installing the appliance, carefully read and observe these instructions, since incorrect installation can cause serious harm to people and damage to the appliance. Store them with care.

According to the latest European legislation, an automated device must be constructed in conformity to the harmonised rules specified in the current Machinery Directive, which allow for declaring the presumed conformity of the automation. Consequently, all the operations for connecting the product to the mains electricity, its commissioning and maintenance must be carried out exclusively by a qualified and expert technician.

In order to avoid any danger from inadvertent resetting of the thermal cut-off device, this appliance must not be powered through an external switching device, such as a timer, or connected to a supply that is regularly powered or switched off by the circuit.

WARNING! Please abide by the following warnings:

- Before commencing the installation, check the “Product technical specifications”, in particular whether this product is suitable for automating your guided part. Should it not be suitable, do NOT proceed with the installation.
- The product cannot be used before it has been commissioned as specified in the “Testing and commissioning” chapter.
- Before proceeding with the product’s installation, check that all the materials are in good working order and suited to the intended applications.
- The product is not intended for use by persons (including children) with reduced physical, sensory or mental capacities, nor by anyone lacking sufficient experience or familiarity with the product.
- Children must not play with the appliance.
- Do not allow children to play with the product’s control devices. Keep the remote controls out of reach of children.
- The system’s power supply network must include a disconnection device (not supplied) with a contact opening gap permitting complete disconnection under the conditions envisaged by Overvoltage Category III.
- During the installation process, handle the product with care by avoiding crushing, impacts, falls or contact with liquids of any kind. Do not place the product near sources of heat nor expose it to open flames. All these actions can damage the product and cause it to malfunction, or lead to dangerous situations. Should this occur, immediately suspend the installation process and contact the Technical Assistance Service.
- The manufacturer declines all liability for damages to property, objects or people resulting from failure to observe the assembly instructions. In such cases, the warranty for material defects shall not apply.
- The weighted sound pressure level of the emission A is lower than 70 dB(A).
- Cleaning and maintenance reserved for the user must not be carried out by unsupervised children.
- Before working on the system (maintenance, cleaning), always disconnect the product from the mains power supply.

Otomatik Kapı Türkiye | Teknik destek: 0212 505 57 58
www.otomatikkapiturkiye.com.tr
Nice teknik dokümanı - Site bağlantısı Otomatik Kapı Türkiye tarafından eklenmiştir.

- Inspect the system frequently, in particular the cables, springs and supports to detect any imbalances and signs of wear or damage. Do not use the product if it needs to be repaired or adjusted, because defective installation or incorrect balancing of the automation can lead to injuries.
- The packing materials of the product must be disposed of in compliance with local regulations.

2 PRODUCT DESCRIPTION AND INTENDED USE

MC424L is an electronic control unit for the automation of swing gates **MC424L** can command 24 V WINGO, TOO, SFAB electro-mechanical actuators. it incorporates an amperometric device that verifies the force of the motors connected to it. This system allows for automatically detecting the limit switches, memorising the work times of each motor and detecting any obstacles during normal gate movement. These characteristics simplify the installation considerably, as the leaf offsets and work times do not require any adjusting.
The control unit is programmed in advance for the most frequently used functions and incorporates a radio receiver for the remote controls. In addition, a straightforward procedure can be implemented to select more specific functions (see the "***PROGRAMMING***" chapter).
MC424L is equipped with an SM-type connector for slot-in radio receivers (see the "***Connecting an SM-type radio receiver***" paragraph) and an IBT4N-type connector which, through the IBT4N interface, can be used to connect BusT4 devices, such as the Oview programmer (see the "***Connecting the IBT4N interface***" paragraph).
The control unit is configured for being powered with PS124 back-up batteries which, in case of a power outage, function as an emergency power supply (see the "***Connecting the PS124 back-up battery***" paragraph). Moreover, the **MC424L** is configured for being connected to a Solemyo solar power kit (see the "***Connecting the Solemyo system***" paragraph).

Any use of the product other than the intended use described is not allowed!

2.1 LIST OF CONTROL UNIT PARTS

The control unit is made up of an electronic command and control board housed and protected inside the box. "***Figure 1***" shows the main parts making up the board.

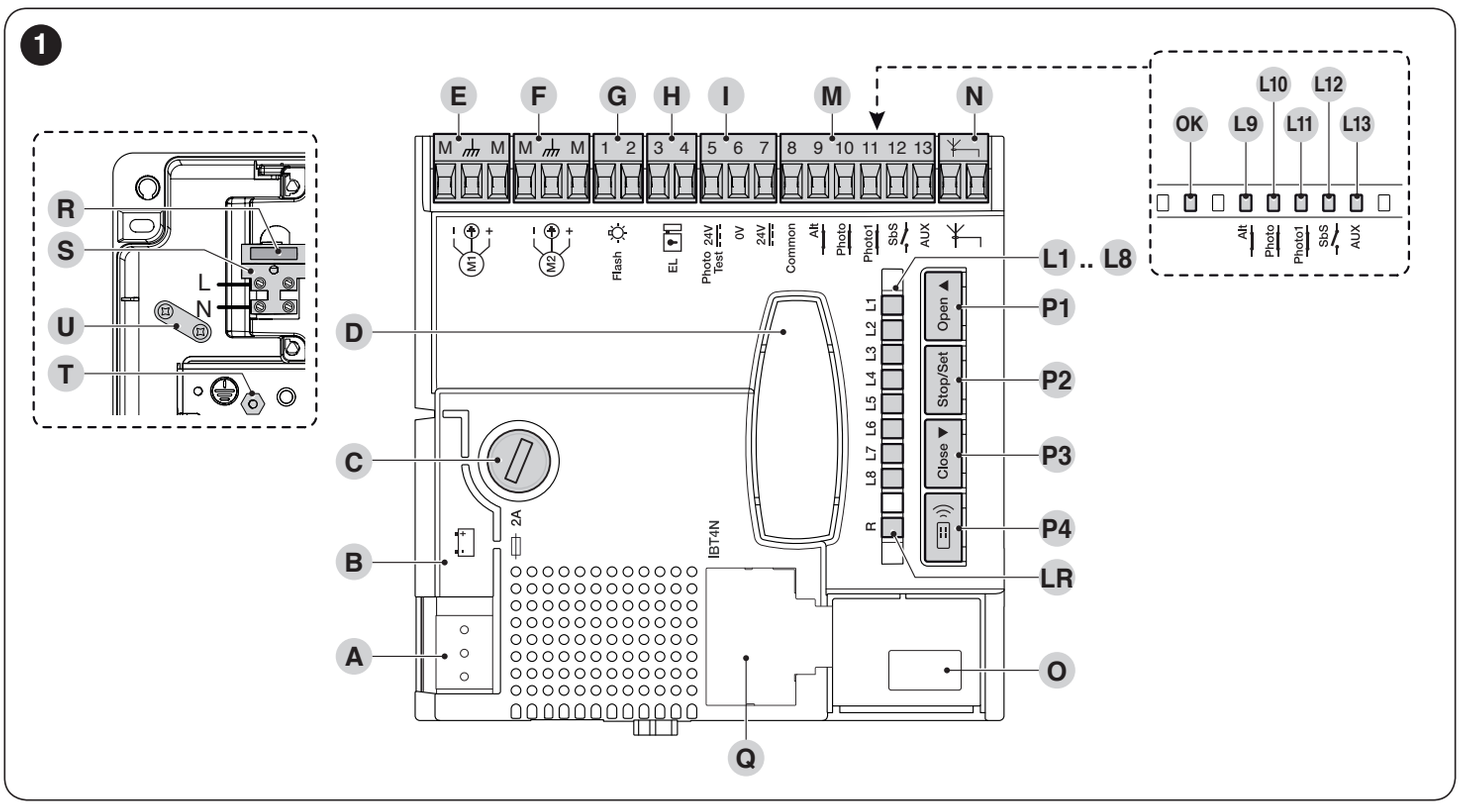

A	24 V~ power supply connector
B	Connector for PS124 back-up battery / Solemyo solar power kit
C	Service fuse (2 A, type F)
D	"SM" connector for radio receiver
E	M1 motor terminal (starts first during the closing phase)
F	M2 motor terminal (starts first during the opening phase)
G	Warning light terminal
H	OGI output or electric lock terminal
I	24 VDC terminals for services and phototest
L9..L13	Input LEDs
OK	"LED OK" status LED
L1..L8	Programming LED
LR	Radio programming LED
M	Input terminals
N	Terminals for radio antenna
O	Motor selector
Q	Connector for IBT4N
R	Mains fuse
S	Mains power supply (L-Live; N-Neutral)
T	Earth connection
U	Cable clamp
P1..P3	Control unit programming buttons
P4	Radio programming button

Otomatik Kapı Türkiye | Teknik destek: 0212 505 57 58
www.otomatikkapiturkiye.com.tr
Nice teknik dokümanı - Site bağlantısı Otomatik Kapı Türkiye tarafından eklenmiştir.

3 INSTALLATION

3.1 PRE-INSTALLATION CHECKS

Before proceeding with the product's installation, it is necessary to:
- check the integrity of the supply
- check that all the materials are in good working order and suited to the intended use
- check that all operating conditions comply with that specified in the "***Product usage limits***" paragraph and in the "***TECHNICAL SPECIFICATIONS***" chapter
- check that the chosen installation location is compatible with the product's overall dimensions (see "***Figure 2***")
- check that the surface chosen for installing the product is solid and can ensure stable attachment
- make sure that the installation area is not subject to flooding; if necessary, the product must be installed appropriately raised above ground level
- check that the space around the product allows safe and easy access
- check that all electrical cables to be used belong to the type listed in "***Table 1***"
- check that the automation has mechanical stops in both the opening and closing phases.

3.2 PRODUCT USAGE LIMITS

The product must be used exclusively with WG2024, WG3524, WG4024, WG5024, TOO3024, TOO4524, XME2024 gearmotors and in accordance with the corresponding usage limits.

3.3 PRODUCT IDENTIFICATION AND OVERALL DIMENSIONS

The overall dimensions and label (A) that allow for identifying the product are shown in "***Figure 2***".

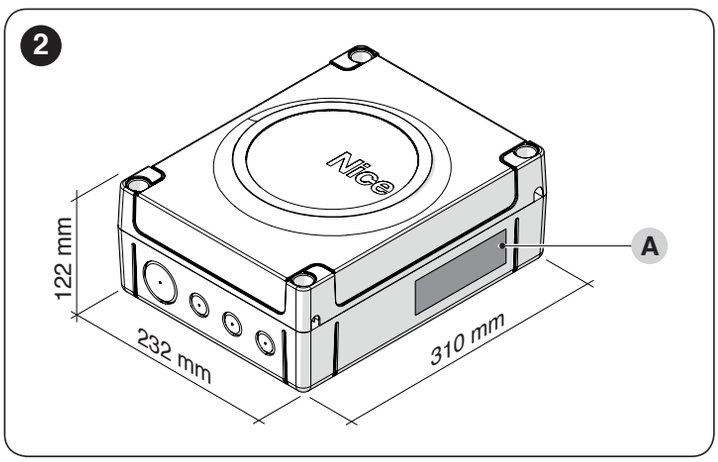

3.4 TYPICAL INSTALLATION

"***Figure 3***" shows an example of an automation system constructed using **Nice** components.

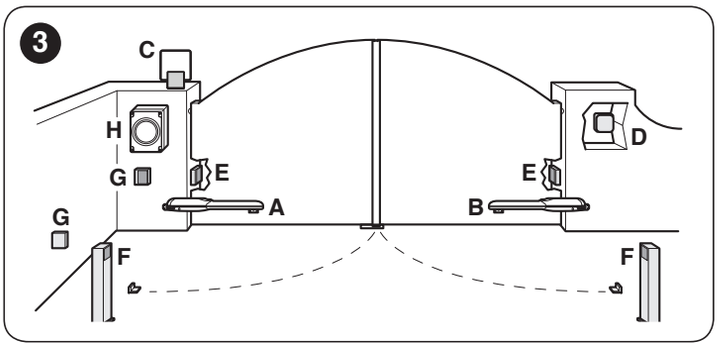

A WINGO, TOO, SFAB 24 V electro-mechanical actuator
B WINGO, TOO, SFAB 24 V electro-mechanical actuator
C Warning light
D Key selector
E "PHOTO" pair of photocells
F "PHOTO1" pair of photocells
G "PHOTO2" pair of photocells
H Control unit

These above-mentioned components are positioned according to a typical standard layout.
In particular, bear in mind that:
- for the characteristics and connection of the photocells, consult the specific instructions of the product
- the intervention of the "PHOTO" pair of photocells during the opening phase has no effect, while it triggers a reversal during the closing phase
- the intervention of the "PHOTO1" pair of photocells stops the manoeuvre during both the opening and closing phases
- the intervention of the "PHOTO2" pair of photocells during the closing phase (connected to the suitably configured AUX input) has no effect, while it triggers a reversal during the opening phase.

Bear in mind that motor M1 is the first to start for the closing movement, while motor M2 is the first to start for the opening movement ("*Figure 4*").

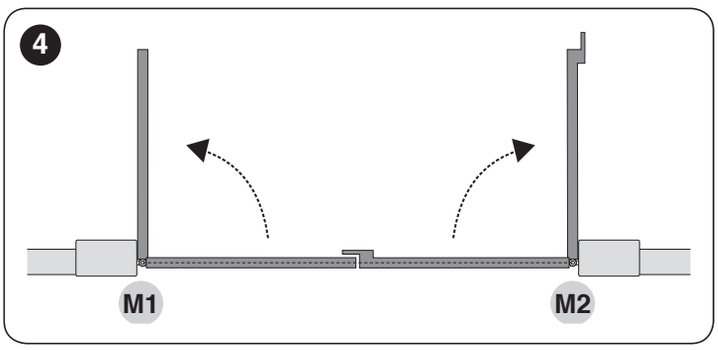

Before proceeding with the installation, prepare the electrical cables required for the system by referring to the "*Wiring diagram and description of connections*" paragraph and to that specified in the "*TECHNICAL SPECIFICATIONS*" chapter.

The cables used must be suited to the type of environment of the installation site.

When laying the ducting for routing the electrical cables and for the cable entry point into the control unit housing, check that there are no water deposits in the junction wells nor condensate in the connection ducts, as water and damp conditions could damage the product's electronic circuits.

Otomatik Kapı Türkiye | Teknik destek: 0212 505 57 58
www.otomatikkapiturkiye.com.tr
Nice teknik dokümanı - Site bağlantısı Otomatik Kapı Türkiye tarafından eklenmiştir.

3.5 INSTALLING THE CONTROL UNIT

Secure the control unit to an unmovable, vertical, flat surface adequately protected against possible impacts. The lower part of the control unit must be at least 40 cm above the ground.

The control unit is also suitable for being installed outdoors, as it is supplied in a container that, if adequately installed, guarantees an IP54 protection rating.

To secure the control unit ("***Figure 5***" and "***Figure 6***"):

1. loosen the screws (**A**) and remove the cover (**B**) of the control unit
2. identify the pre-cut holes (**C**) located along the lower side of the box and perforate the ones used to pass the electrical cables

The side cable entry (D) can only be used if the control unit is installed indoors, in a protected environment.

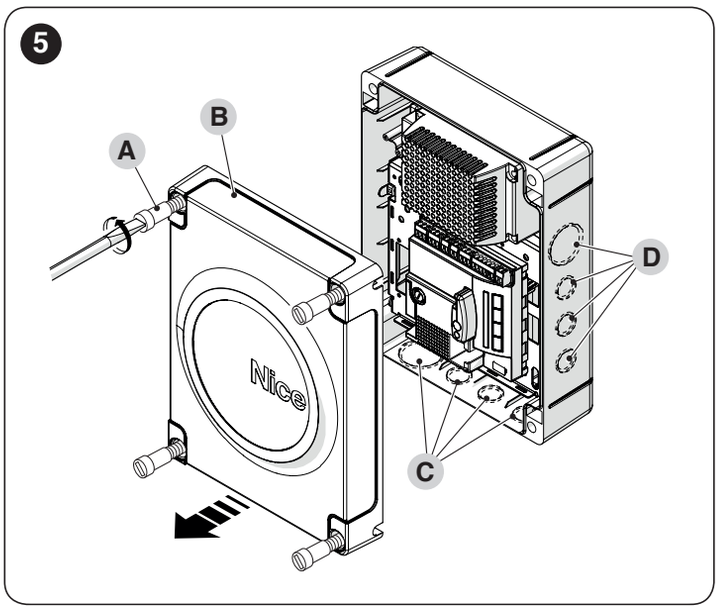

3. drill the wall (**E**) by observing the measurements shown in the figure and arrange suitable wall plugs (not supplied)
4. position the box (**F**) and fasten it with the screws (**G**) (not supplied)
5. arrange cable glands for passing the connecting cables
6. make the electrical connections by operating as described in the "***ELECTRICAL CONNECTIONS***" chapter.

To install any other devices used on the automated system, refer to the respective instruction manuals.

7. after making the electrical connections, put the cover (**B**) back on and tighten the screws (**A**).

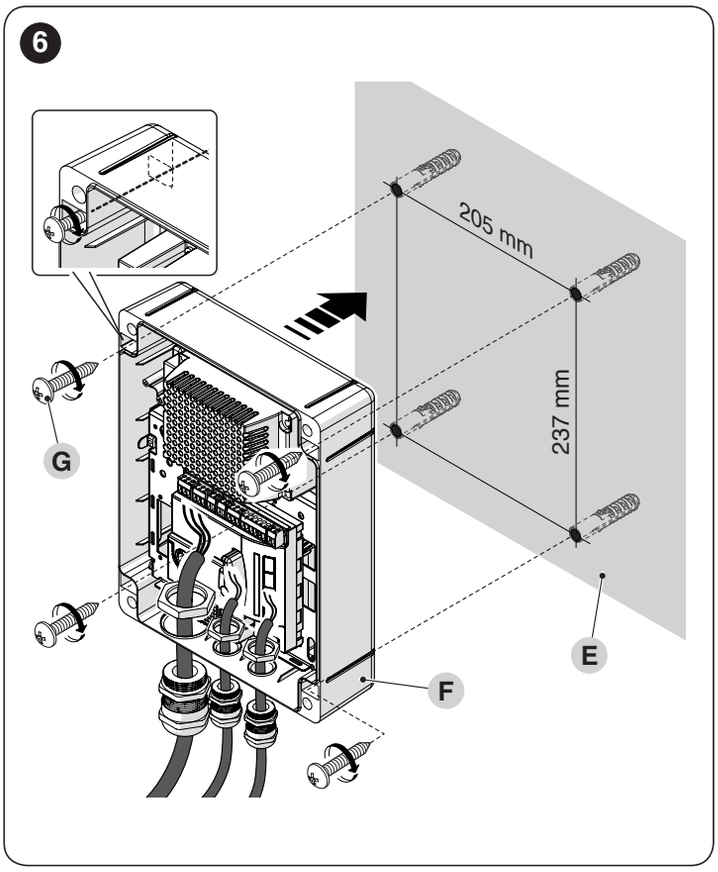

4 ELECTRICAL CONNECTIONS

4.1 PRELIMINARY CHECKS

All electrical connections must be made with the system disconnected from the mains electricity and with the back-up battery (if present) disconnected.

The connection operations must only be carried out by qualified personnel.

Check that all electrical cables to be used are of the suitable type

Otomatik Kapı Türkiye | Teknik destek: 0212 505 57 58
www.otomatikkapiturkiye.com.tr
Nice teknik dokümanı - Site bağlantısı Otomatik Kapı Türkiye tarafından eklenmiştir.

4.2 WIRING DIAGRAM AND DESCRIPTION OF CONNECTIONS

4.2.1 Wiring diagram

7

A **Connection with “Stand-by all” active (energy saving)**

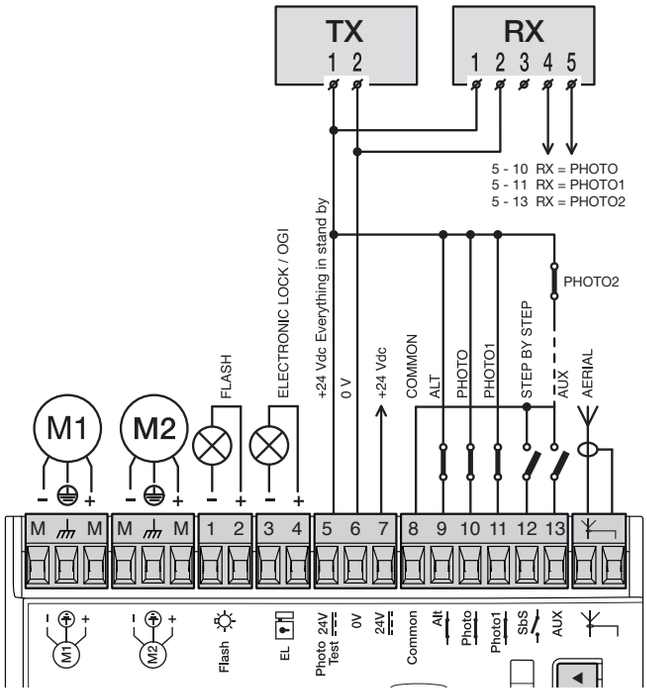

B **Standard connection: without using the “Stand-by all” and without the “Phototest”**

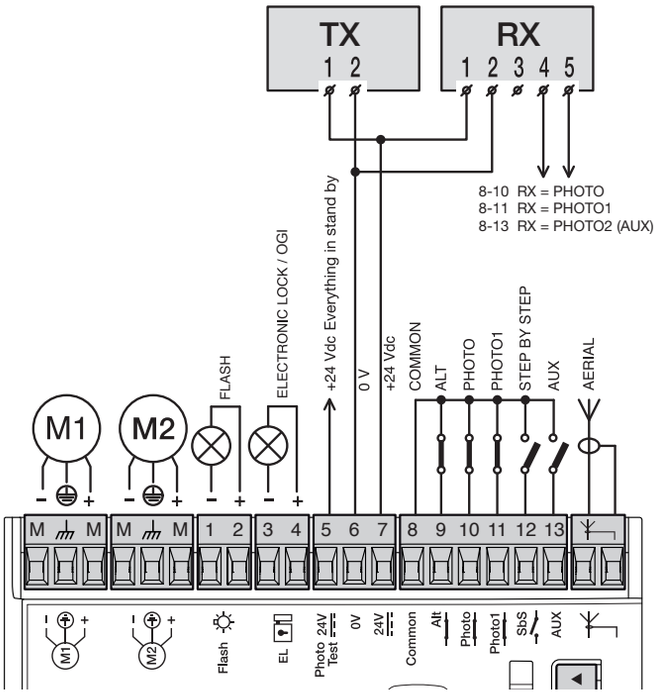

C **Connection without the “Stand-by all” and with the “Phototest”**

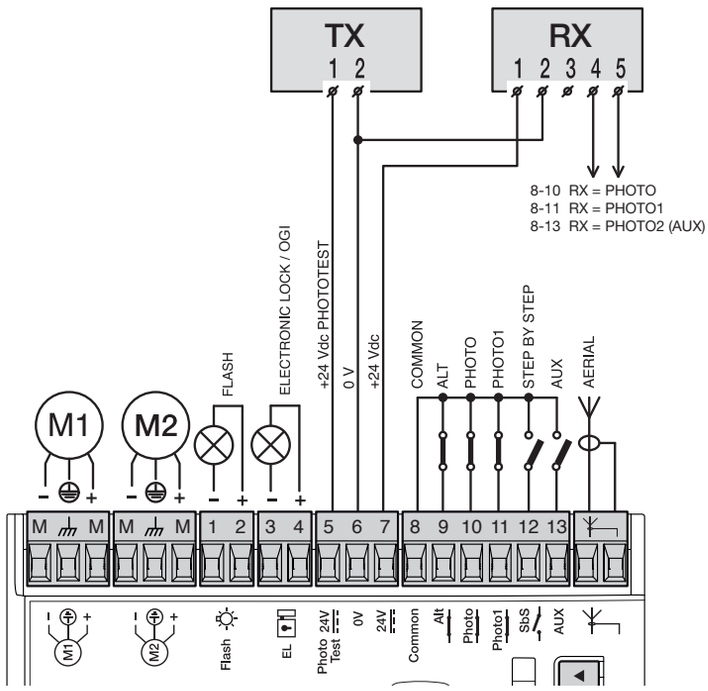

D **Connection without the “Stand-by all”, with the “Phototest” and without the “Photo1”**

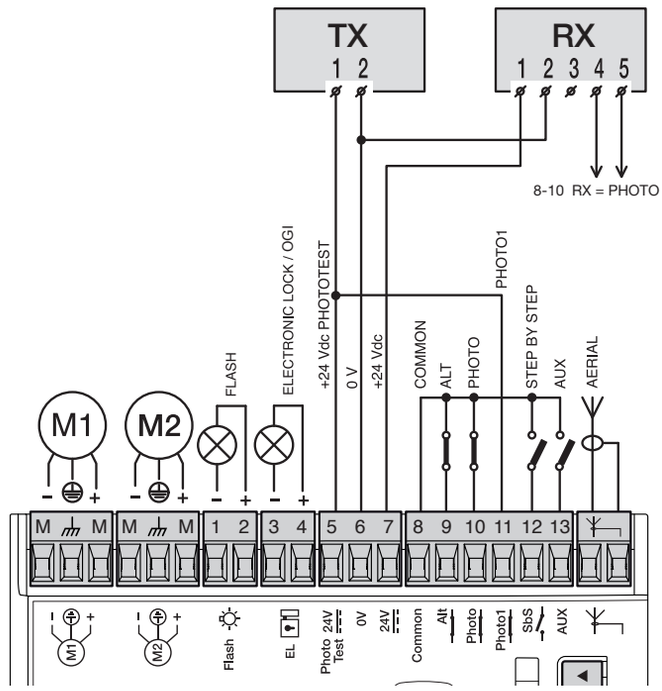

Otomatik Kapı Türkiye | Teknik destek: 0212 505 57 58
www.otomatikkapiturkiye.com.tr
Nice teknik dokümanı - Site bağlantısı Otomatik Kapı Türkiye tarafından eklenmiştir.

4.2.2 Description of connections

The meaning of the codes/wording stamped on the electronic board near the relative terminals is described below.

Table 1

ELECTRICAL CONNECTIONS			
Terminals	**Function**	**Description**	**Cable type**
L - N - ⏚	120/230/250 V ~ 50/60 Hz POWER SUPPLY	Mains power supply	3 x 1.5 mm²
M⏚M	Motor 1	Connection of motor M1 [**note 1**]	3 x 1.5 mm²
M⏚M	Motor 2	Connection of motor M2	3 x 1.5 mm²
1÷2	Warning light	Connection of the 24 V ⎓ max 25 W warning light	2 x 1 mm²
3÷4	OGI / Electric lock	Connection of the 24 V ⎓ max 5 W Open Gate Indicator or 12 V ⎓ max 15 VA Electric Lock (see the "***PROGRAMMING***" chapter)	OGI: 2 x 0.5 mm² Electric lock: 2 x 1 mm²
5	24 V ⎓ common input (with Stand-by all / phototest)	+24 V ⎓ power supply for TX photocells with phototest (max 100 mA); "COMMON" for all safety inputs, with "Stand-by all" function active [**note 2**]	1 x 0.5 mm²
6	0 V ⎓	0 V power supply ⎓ for services	1 x 0.5 mm²
7	24 V ⎓	Services power supply, without "Stand-by all" (24 V ⎓ max 200 mA)	1 x 0.5 mm²
8	Common 24 V ⎓	Common for all inputs (+24 V ⎓) without "Stand-by all"	1 x 0.5 mm²
9	ALT (STOP)	Input with STOP function (emergency, safety lock) [**note 3**]	1 x 0.5 mm²
10	FOTO (PHOTO)	NC input for safety devices (photocells, sensitive edges)	1 x 0.5 mm²
11	FOTO1 (PHOTO1)	NC input for safety devices (photocells, sensitive edges)	1 x 0.5 mm²
12	PASSO-PASSO (STEP-BY-STEP)	Input for cyclic operation (OPEN-STOP-CLOSE-STOP)	1 x 0.5 mm²
13	AUX	Auxiliary input [**note 4**]	1 x 0.5 mm²
	Antenna	Radio receiver antenna connection	RG58-type shielded cable

Note 1 Not used for single-leaf gates (the control unit automatically recognises whether there is only one motor installed).

Note 2 The "Stand-by all" is used to limit consumption; for further details on the electrical connections, refer to the "***Stand-by all / Phototest connection***" paragraph, and consult the "***PROGRAMMING***" chapter for information on programming.

Note 3 The ALT (STOP) input can be used for NC contacts or 8.2 kΩ fixed resistor contacts in self-recognition mode (see the "***PROGRAMMING***" chapter).

Note 4 The AUX auxiliary input is programmed by default with the "Type 1 partial open" function, but can be programmed with one of the functions shown in "***Table 2***".

Table 2

PROGRAMMABLE FUNCTIONS FOR THE AUX INPUT		
Function	**Type of input**	**Description**
TYPE 1 PARTIAL OPEN	NO (normally open)	Opens the upper leaf completely
TYPE 2 PARTIAL OPEN	NO (normally open)	Opens the two leaves halfway
OPEN	NO (normally open)	Performs the open manoeuvre only
CLOSE	NO (normally open)	Performs the close manoeuvre only
PHOTO 2	NC (normally closed)	PHOTO 2 function
STOP	NO (normally open)	Stops the manoeuvre
EXCLUDED	--	No function

4.2.3 Operations for connection

To make the electrical connections ("***Figure 7***"):

1. remove the terminals from their housings
2. connect the various devices to the relevant terminals according to the diagram shown in "***Figure 7***"
3. put the terminals back into their housings.
4. connect the power supply cable to points (**A**) and (**B**) and secure it with the cable clamp (**C**) ("***Figure 8***").

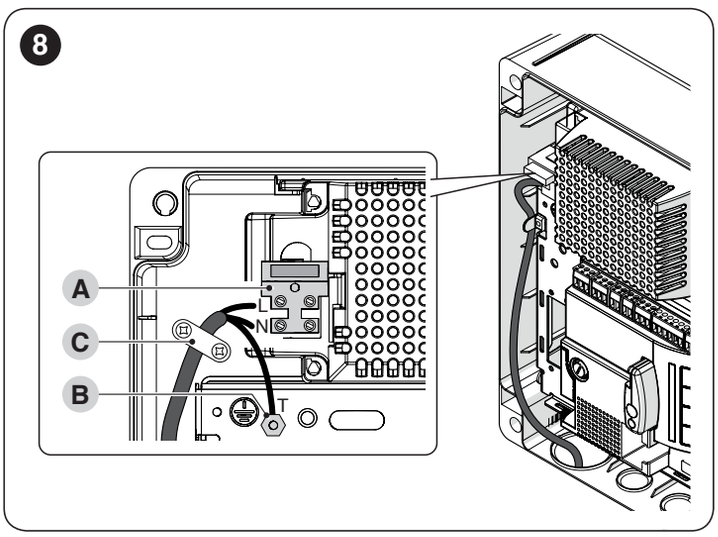

Otomatik Kapı Türkiye | Teknik destek: 0212 505 57 58
www.otomatikkapiturkiye.com.tr
Nice teknik dokümanı - Site bağlantısı Otomatik Kapı Türkiye tarafından eklenmiştir.

4.2.4 Notes on connections

Most of the connections are extremely easy to make, as they are largely connections directed at a single user or contact. Below are some examples on how to connect external devices.

4.2.4.1 Stand-by all / Phototest connection

The "Stand-by all" function allows for reducing consumption and is active as a standard feature. It is automatically excluded only when the "Phototest" function activates.

Note The "Stand-by all" and "Phototest" functions are alternative, as one excludes the other.

The possible connection options are listed below:
- with "Stand-by all" active (**energy saving**) ("***Figure 7* A**")
- without "Stand-by all" and without "Phototest" (**standard connection**) ("***Figure 7* B**")
- without "Stand-by all" and with "Phototest" ("***Figure 7* C**").

With the "Stand-by all" function active, 1 minute after the end of the manoeuvre the control unit enters the "Stand-by all" mode by switching off all the inputs and outputs to limit consumption. The relevant status is signalled by the "OK" LED, which starts flashing more slowly.

If the control unit is powered with a photovoltaic panel ("Solemyo" system) or with a back-up battery, the "Stand-by all" function must be activated as shown in the "energy saving" diagram ("*Figure 7* A").

When the "Stand-by all" function is not required, the "Phototest" function can be activated, which can be used to verify – at the start of each manoeuvre – whether the connected photocells are working properly. To use this function, it is necessary to connect the photocells appropriately ("***Figure 7* C**") and then activate the function.

Note By activating the "Phototest" function, the inputs subject to the testing procedure are PHOTO, PHOTO1 and PHOTO2. If one of these inputs is not used, it must be connected to the "PHOTOTEST" terminal (number 5) ("***Figure 7* D**").

4.2.4.2 Key selector connection

Connection of the key selector to perform the "STEP-BY-STEP" and "STOP" functions ("***Figure 9***").

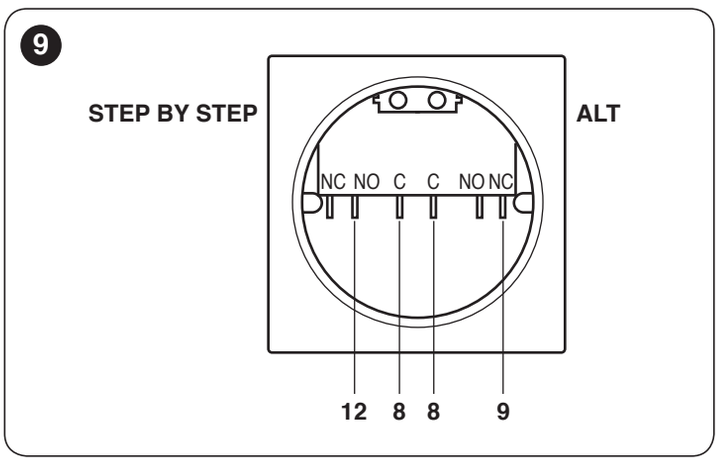

To connect ALT (STOP) with the "Stand-by all" function active, use terminal no. 5 and not no. 8 (see the "*Stand-by all / Phototest connection*" paragraph).

Connection of the selector to carry out the "STEP-BY-STEP" functions and one of those relevant to the AUX auxiliary input (PARTIAL OPENING, OPEN ONLY, CLOSE ONLY, etc.) ("***Figure 10***").

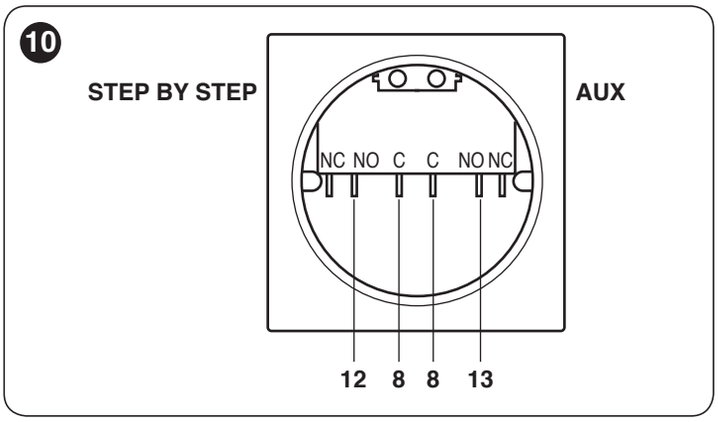

4.2.4.3 Connecting the Open Gate Indicator / Electric Lock

The OGI (Open Gate Indicator) output, if suitably programmed, can be used as a "Open Gate Indicator". The indicator light will flash slowly during the opening phase and quickly during the closing phase. It will remain steady lit with the gate open (stopped) and off with the gate closed. If the output is programmed as an electric lock, it activates for 3 seconds whenever an opening manoeuvre starts ("***Figure 11***").

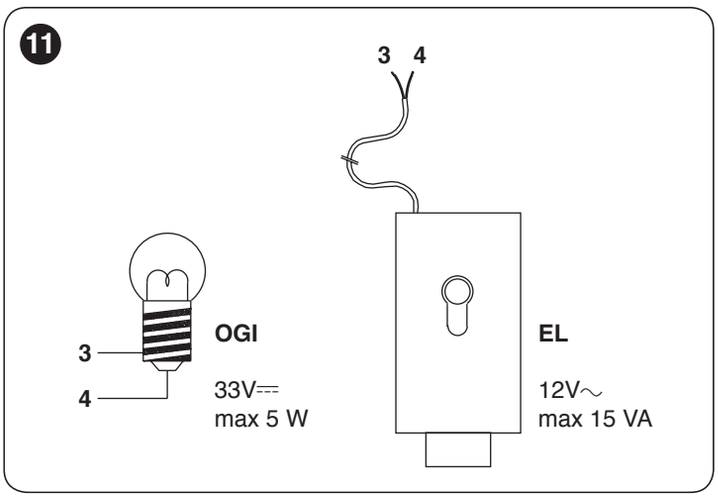

4.2.5 ALT (STOP) input type

The **MC424L** control unit can be programmed to configure two types of ALT (STOP) inputs:
- **NC-type STOP** for NC contacts
- **Fixed resistor STOP type** for connecting devices with 8.2 kΩ fixed resistor output (e.g. sensitive edges) to the control unit. The input measures the resistor's value and removes the manoeuvre consent when the resistor exceeds the nominal value. With suitable arrangements, normally open (NO), normally closed (NC) and even multiple devices of a different type can be connected to the ALT input, configured as a fixed resistor (see "***Table 3***").

Table 3

FIXED RESISTOR STOP INPUT				
		FIRST device type		
		NO	**NC**	**8.2 kΩ**
SECOND device type	**NO**	In parallel [**Note 1**]	[**Note 2**]	In parallel
	NC	[**Note 2**]	In series [**Note 3**]	In series
	8.2 kΩ	In parallel	In series	[**Note 4**]

Otomatik Kapı Türkiye | Teknik destek: 0212 505 57 58
www.otomatikkapiturkiye.com.tr
Nice teknik dokümanı - Site bağlantısı Otomatik Kapı Türkiye tarafından eklenmiştir.

Note 1 One or more NO devices can be connected in parallel to one another without any quantity limitation with an 8.2 kΩ termination resistor ("***Figure 12***"). For electrical connections with the "Stand-by all" function active, refer to the "***Stand-by all / Phototest connection***" paragraph.

To connect ALT (STOP) with the "Stand-by all" function active, use terminal no. 5 and not no. 8 (see the "*Stand-by all / Phototest connection*" paragraph).

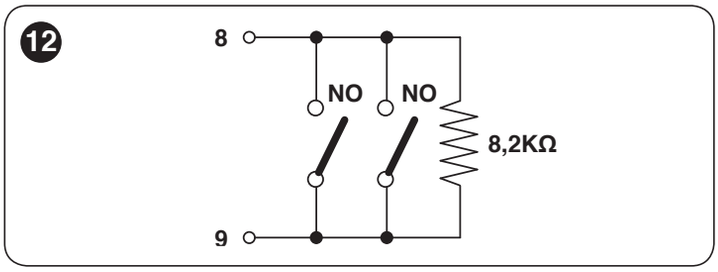

Note 2 Multiple devices can be connected as NO and NC contacts in parallel, taking care to place a 8.2 kΩ resistor in series with the NC contact (this also allows for combining 3 devices: NO, NC and 8.2 kΩ ("***Figure 13***").

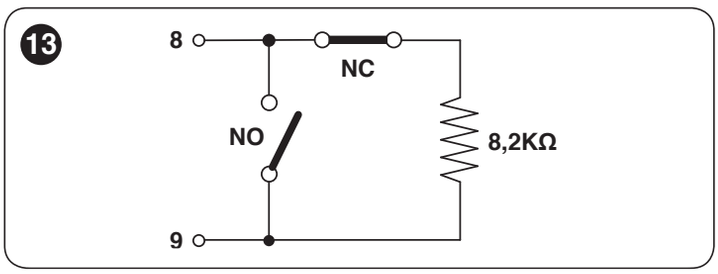

Note 3 One or more NC-type devices can be connected in series to one another and to an 8.2 kΩ resistor without any quantity limitation ("***Figure 14***").

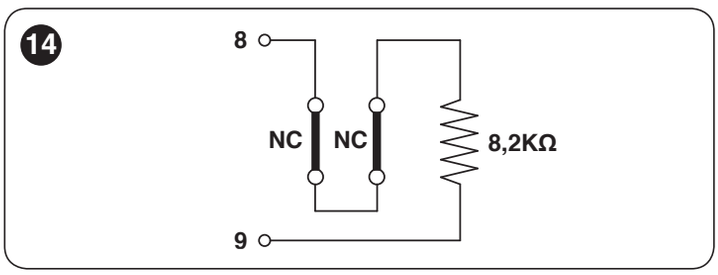

Note 4 Only one device with 8.2 kΩ fixed resistor output can be connected; if needed, multiple devices must be connected "in cascade" mode with a single 8.2 kΩ termination resistor ("***Figure 15***").

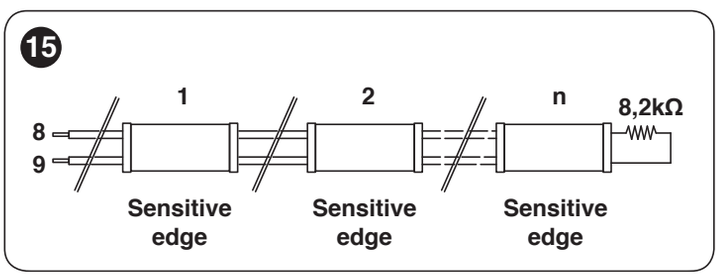

4.3 INITIAL START-UP AND ELECTRICAL CONNECTIONS TEST

After powering the control unit, carry out the following checks:

1. check that terminals "**6-7**" have roughly 30 VDC voltage ("***Figure 16***"). If the values do not match up, immediately disconnect the power supply and carefully check the connections and supply voltage.

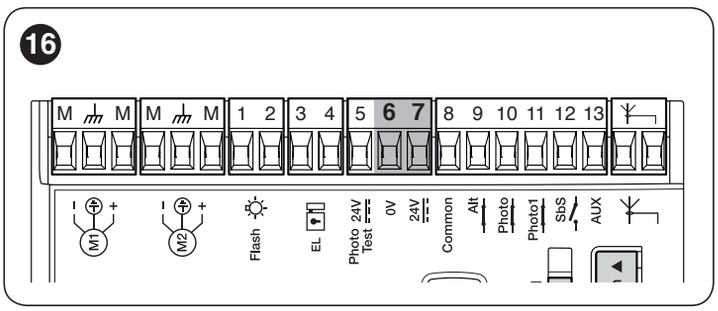

2. after the quick initial flash, the "**OK**" LED will signal the correct operation of the control unit by flashing regularly every second. When there is a variation on the control unit inputs, the "**OK**" LED will emit a quick double flash to signal that the input has been recognised
3. if the connections have been made correctly the "**NC**"-type inputs must have the corresponding LED lit, while the "**NO**"-type inputs must have the corresponding LED off (refer to "***Figure 17***" and to "***Table 4***").

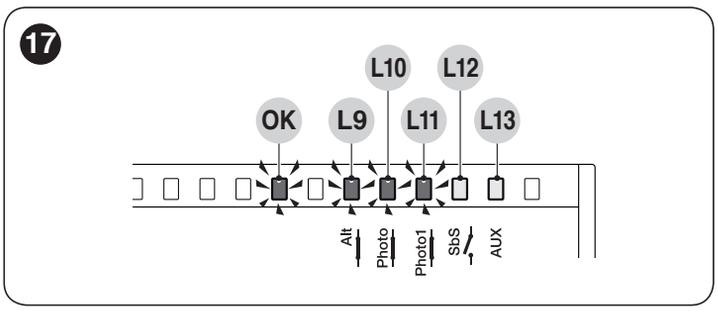

Table 4

INPUT-LED MATCHES		
Input	**Type of input**	**LED status**
ALT (STOP)	ALT (STOP) NC	L9 lit (Only after point 5)
	8.2 kΩ FIXED RESISTOR STOP	L9 lit (Only after point 5)
FOTO (PHOTO)	NC	L10 lit
FOTO1 (PHOTO1)	NC	L11 lit
Sbs	NO	L12 off
AUX	PARTIAL OPEN type 1 - NO	L13 off
	PARTIAL OPEN type 2 - NO	L13 off
	OPEN ONLY - NO	L13 off
	CLOSE ONLY - NO	L13 off
	PHOTO2 - NC	L13 lit

Otomatik Kapı Türkiye | Teknik destek: 0212 505 57 58
www.otomatikkapiturkiye.com.tr
Nice teknik dokümanı - Site bağlantısı Otomatik Kapı Türkiye tarafından eklenmiştir.

4. verify that, when intervening on the devices connected to the inputs, the corresponding LEDs switch off or on
5. verify that, when pressing the "**[Stop/Set]**" button and **[Close ▼]** ("***Figure 18***") for over 3 seconds, both the motors complete a brief opening manoeuvre with the upper leaf motor starting first. Stop the manoeuvre by pressing the **[Stop/Set]** button. LED "**L9**" ("***Figure 17***") must switch on to signal the correct self-recognition.

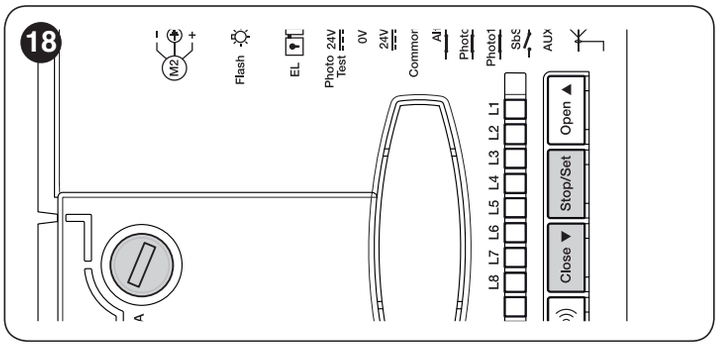

If the motors do not start for the opening manoeuvre, invert the polarity of the motor cables. If the first motor to move is not the one associated with the upper leaf, invert M1 with M2.

If any one of these tests fails, disconnect the power supply to the control unit and check the various electrical connections made previously.

4.4 MOTOR SELECTOR

The control unit is equipped with a selector (**A** - "***Figure 19***") that allows for specifying which type of motor to use (see "***Table 5***").

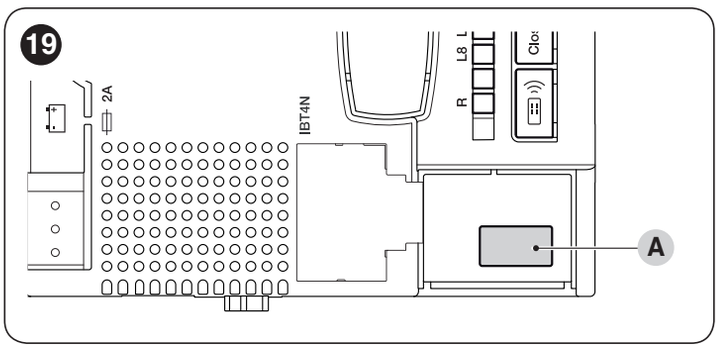

Any configuration not appearing in "*Table 5*" is not allowed.

Table 5

SELECTING THE MOTOR TYPE	
Motor type	**Motor selector**
Generic	ON 1 2 3 4
WG2024	ON 1 2 3 4
WG3524	ON 1 2 3 4
WG4024	ON 1 2 3 4
WG5024	ON 1 2 3 4
TOO3024	ON 1 2 3 4
TOO4524	ON 1 2 3 4
XME2024	ON 1 2 3 4

4.5 AUTOMATIC LIMIT SWITCH SEARCH AND "STOP" INPUT ACQUISITION

Once the checks have been completed, the automatic search for mechanical stop devices connected to the control unit can start. This operation is necessary, as the control unit must detect the duration of the opening and closing manoeuvres. The procedure is entirely automatic and consists in measuring the motor effort to detect the mechanical stop devices during the opening and closing phases.

Before starting the limit switch search, check that all the safety devices give their consent (STOP, PHOTO and PHOTO1 enabled). The intervention of a safety device or the arrival of a command during the procedure causes its immediate interruption. The leaves MUST be positioned roughly halfway along their path.

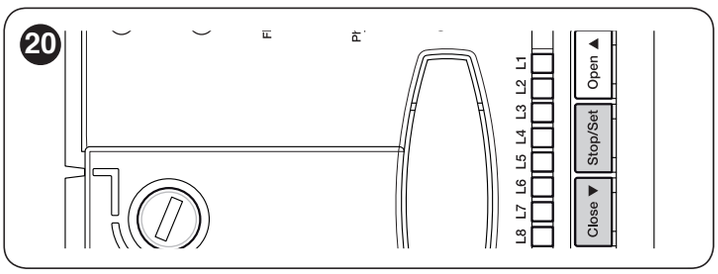

Press **[Stop/Set]** and **[Close ▼]** ("***Figure 20***") for over 3 seconds to start the automatic search phase.

The procedure entails:
- control and memorisation of the motor selector
- control and memorisation of the ALT input (NC / 8.2 kΩ)
- brief opening of both motors
- closing of the lower leaf motor up to the mechanical stop for the closing phase
- closing of the upper leaf motor up to the mechanical stop for the closing phase
- start of upper leaf motor opening
- after the programmed offset, start of the lower leaf opening movement
- the control unit will measure the movement required so that the motors can reach the mechanical stops for the opening phase
- the control unit runs the complete closing manoeuvre. The motors can start at different times. The aim is to have a staggered closing of the leaves so as to avoid potential shearing between the leaves
- end of the procedure with memorisation of all the measurements recorded.

All these phases occur one after the other, without any intervention by the operator.

If, for any reason, the procedure fails to advance correctly, it must be interrupted by pressing the [Stop/Set] button. The procedure must then be repeated (if necessary, by modifying the parameters, for example the amperometric device thresholds and the leaf delay – consult the "*PROGRAMMING*" chapter).

This procedure can be repeated without having to delete the memory.

Otomatik Kapı Türkiye | Teknik destek: 0212 505 57 58
www.otomatikkapiturkiye.com.tr
Nice teknik dokümanı - Site bağlantısı Otomatik Kapı Türkiye tarafından eklenmiştir.

5 TESTING AND COMMISSIONING

These are the most important phases of the automation's construction, as they ensure maximum safety of the system. The test can also be used to periodically verify the devices making up the automation.
Testing and commissioning of the automation must be performed by skilled and qualified personnel, who are responsible for the tests required to verify the solutions adopted according to the risks present, and for ensuring that all legal provisions, standards and regulations are met, in particular all the requirements of the EN 12445 standard, which defines the test methods for checking gate automations.
The additional devices must undergo specific testing, both in terms of their functions and their proper interaction with the control unit. Refer to the instruction manuals of the individual devices.

5.1 TESTING

The sequence of steps to be performed when running the testing phase, as described below, refers to a typical system ("***Figure 3***").
To run the test:

1. check that the activation of the STEP-BY-STEP (Sbs) input triggers the "Open, Stop, Close, Stop" sequence
2. check that the activation of the AUX input (Type 1 partial opening function) manages the "Open, Stop, Close, Stop" sequence only for the upper leaf motor. The lower leaf motor must remain still during the closing phase
3. start an opening manoeuvre and verify that:
   - when engaging FOTO (PHOTO) the gate continues the opening manoeuvre
   - when engaging FOTO1 (PHOTO1) the manoeuvre stops until FOTO1 is disengaged. Subsequently, the manoeuvre will resume the opening movement
   - with FOTO2 (PHOTO2), after engaging this device, the manoeuvre must stop and restart during the closing phase
4. verify that when the leaf reaches the mechanical stop for the opening phase, the motors switch off
5. start a closing manoeuvre and verify that:
   - when engaging FOTO, the manoeuvre stops and restarts during the opening phase
   - when engaging FOTO1 (PHOTO1) the manoeuvre stops until FOTO1 is disengaged. Subsequently, the manoeuvre will resume the opening movement
   - when engaging FOTO2, the gate continues the closing manoeuvre
6. verify that the stoppage devices connected to the STOP input cause the immediate stoppage of any movement under way and a brief reversal
7. check that the level of the obstacle detection system is suited to the application: during the manoeuvre, during both the opening and closing phases, prevent the leaf's movement by simulating an obstacle and verify that the manoeuvre reverses before exceeding the force specified in the regulations
8. other checks can be necessary depending on the devices connected to the inputs.

If an obstacle is detected for two consecutive manoeuvres in the same direction, the control unit will perform a partial reversal of both motors for one second only. After the next command is given, the leaves will start opening and the first intervention of the amperometric device for each motor will be regarded as a mechanical stop for the opening phase. The same behaviour occurs when the mains power supply is restored: the first command is always an opening command and the first obstacle is always regarded as a mechanical stop for the opening phase.

5.2 COMMISSIONING

Commissioning can only be performed after all testing phases have been successfully completed.

Before commissioning the automation, ensure that the owner is properly informed of all residual risks and hazards.

To commission the automation:

1. compile the automation's technical file, which must include the following documents: overall drawing of the automation, wiring diagram, risk assessment and relative solutions adopted, the manufacturer's declaration of conformity for all devices used and the declaration of conformity compiled by the installer
2. affix a data plate on the gate specifying at least the following data: type of automation, name and address of the manufacturer (responsible for commissioning), serial number, year of manufacture and CE mark
3. compile the declaration of conformity of the automation and hand it to the owner of the automation
4. compile the User Manual of the automation and hand it to the owner of the automation
5. compile and provide the owner with the automation's "Maintenance schedule", containing the maintenance instructions for all the automation's devices.

For all the above-mentioned documentation, Nice – through its technical assistance service – provides the following: pre-completed forms.

6 PROGRAMMING

There are 4 buttons on the control unit: **[Open ▲]**, **[Stop/Set]**, **[Close ▼]** and **[Radio))]** ("***Figure 21***"), which can be used both for commanding the control unit during the testing phases and for programming the available functions.

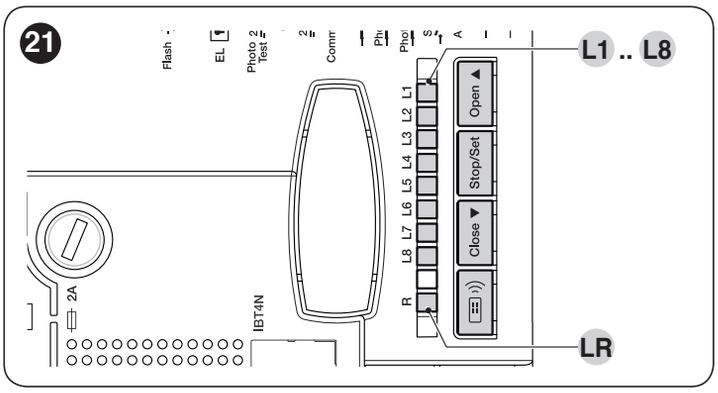

The programmable functions available are arranged on **two levels** and their operating status is signalled by the eight LEDs "**L1 ... L8**" and by the "**LR**" LED present on the control unit (LED lit = function active; LED off = function not active).

6.1 USING THE PROGRAMMING BUTTONS

[Open ▲]:
- Button for commanding the gate opening
- Selection button during the programming phase.

[Stop/Set]:
- Button used to stop a manoeuvre
- If pressed for more than 5 seconds, it allows for entering the programming mode.

[Close ▼]
- Button for commanding the gate's closure
- Selection button during the programming phase.

Otomatik Kapı Türkiye | Teknik destek: 0212 505 57 58
www.otomatikkapiturkiye.com.tr
Nice teknik dokümanı - Site bağlantısı Otomatik Kapı Türkiye tarafından eklenmiştir.

6.2 PRE-SET FUNCTIONS

The control unit has a few programmable functions, which are pre-set in a typical configuration that suits most automations (see "***Table 6***"). The functions can be modified at any time, both before and after the automatic limit switch search phase, through appropriate programming procedures described below.

Table 6

PRE-SET FUNCTIONS	
Function	**Pre-set value**
Automatic closing	active
Condominium	disabled
Pre-flashing	disabled
Close after photo	disabled
Opening delay	level 5 (20%)
Stand-by all / Phototest	Stand-by all
Electric lock / OGI	Electric lock
ALT (STOP) input	self-recognition NC / 8.2 kΩ
Heavy gates	disabled
Pause time	30 seconds
Auxiliary input	Type 1 partial opening (activates upper leaf motor only)
Amperometric sensitivity	level 3

6.3 LEVEL 1 PROGRAMMING (ON-OFF)

All the Level 1 functions are set by default to "**OFF**" and can be modified at any time. Refer to "***Table 7***" to check the various functions.

6.3.1 Level 1 programming procedure

The user has maximum 10 seconds to press the buttons consecutively during the programming procedure, after which time the procedure terminates automatically and memorises the changes made up to then.

To perform Level 1 programming:

1. press and hold the **[Stop/Set]** button until LED "**L1**" starts flashing
2. press the **[Open ▲]** or **[Close ▼]** button to move the flashing LED to the LED associated with the function to be modified
3. press the **[Stop/Set]** button to change the status of the function:
   - short flash = **OFF**
   - long flash = **ON**
4. wait 10 seconds (maximum time) to exit the programming mode.

To set other functions to "ON" or "OFF", while the procedure is running, repeat points 2 and 3 during the phase itself.

Table 7

LEVEL 1 FUNCTIONS (ON-OFF)		
LED	**Function**	**Description**
L1	**Automatic closing**	**Function ENABLED:** after an opening manoeuvre there is a pause (equal to the set pause time), after which the control unit automatically starts a closing manoeuvre. The pause time is set by default to 30 seconds. Pressing the [Stop/Set] button or the intervention of the "STOP" input stop the cycle. **Function NOT ENABLED:** the system works in "semi-automatic" mode.
L2	**Close after photo**	**Function ENABLED:** if the photocells intervene during the opening or closing manoeuvre, the pause time drops to 4 seconds regardless of the set "pause time". With "automatic closing" deactivated, if the photocells intervene during the opening or closing manoeuvre, the "automatic closing" activates with a 4-second "pause time".
L3	**Always Close**	**Function ENABLED:** in the event of a blackout, even of short duration, 10 seconds after the electricity is restored the control unit detects that the gate is open and automatically starts a closing manoeuvre, preceded by 5 seconds of pre-flashing.
L4	**Stand-by / Phototest**	**Function ENABLED:** phototest. Instead of the "Stand-by all" function, the user can activate the "Phototest" function, which verifies whether the photocells function properly at the start of a manoeuvre. To use this function, the connect the photocells correctly (see "***Figure 7* C**") then activate the function. **Function NOT ENABLED:** stand-by. The control unit has the "Stand-by all" function set by default; if it is active, 1 minute after the end of the manoeuvre the control unit switches off the "Stand-by all" function (terminal 5), all the inputs and the other outputs to limit consumption (see "***Figure 7* A**"). This function is mandatory if the control unit is powered exclusively through Solemyo photovoltaic panels. It is recommended even if the control unit is powered from the mains and the user wishes to increase the emergency mode operation with the PS124 back-up battery.

Otomatik Kapı Türkiye | Teknik destek: 0212 505 57 58
www.otomatikkapiturkiye.com.tr
Nice teknik dokümanı - Site bağlantısı Otomatik Kapı Türkiye tarafından eklenmiştir.

LEVEL 1 FUNCTIONS (ON-OFF)		
LED	**Function**	**Description**
L5	**Electric lock / OGI (Open Gate Indicator)**	**Function ENABLED:** OGI (Open Gate Indicator). If the function is enabled, terminals 3-4 can be used to connect an open gate indicator light (24 V). **Function NOT ENABLED:** electric lock. If the function is not enabled, terminals 3-4 can be used to connect the electric lock.
L6	**Pre-flashing**	**Function ENABLED:** the warning light starts flashing 3 seconds before the start of the manoeuvre to signal in advance a dangerous situation. **Function NOT ENABLED:** the warning light starts flashing when the manoeuvre starts.
L7	**Condominium function**	**Function ENABLED:** each command received triggers an opening manoeuvre that cannot be interrupted by subsequent command impulses. **Function NOT ENABLED:** each command received triggers an OPEN-STOP-CLOSE-STOP sequence, which is useful when many people use the automation with radio commands.
L8	**Light/Heavy Gates**	**Function ENABLED:** if the function is enabled, the control unit can be configured to control heavy gates by setting the acceleration ramp and closing slowdown speeds differently. **Function NOT ENABLED:** if the function has not been enabled, the control unit is set for controlling light gates.

6.4 LEVEL 2 PROGRAMMING (ADJUSTABLE PARAMETERS)

All Level 2 parameters are set by default as shown under "**GREY**" in "***Table 8***" and can be modified at any time. The parameters can be adjusted to a value between 1 and 8. To check the value corresponding to each LED, refer to "***Table 8***".

6.4.1 Level 2 programming procedure

The user has maximum 10 seconds to press the buttons consecutively during the programming procedure, after which time the procedure terminates automatically and memorises the changes made up to then.

To perform Level 2 programming:

1. press and hold the **[Stop/Set]** button until LED "**L1**" starts flashing
2. press the **[Open ▲]** or **[Close ▼]** button to move the flashing LED to the "**entry LED**" associated with the parameter to be modified
3. press and hold the **[Stop/Set]** button. With the **[Stop/Set]** button pressed:
   - wait roughly 3 seconds, until the LED representing the current level of the parameter to be modified lights up
   - press the **[Open ▲]** or **[Close ▼]** button to shift the LED associated with the parameter's value
4. release the **[Stop/Set]** button
5. wait 10 seconds (maximum time) to exit the programming mode.

To set multiple parameters during the procedure's execution, repeat the operations from point 2 to point 4 during the phase itself.

The set value highlighted in grey ("*Table 8*") indicates that is the default value.

Table 8

LEVEL 2 FUNCTIONS (ADJUSTABLE PARAMETERS)				
Entry LED	**Parameter**	**LED (level)**	**Set value**	**Description**
L1	**Pause Time**	L1	5 seconds	Adjusts the pause time, in other words, the time that elapses before automatic re-closure. It is only effective if the Close function is enabled.
		L2	15 seconds	
		L3	**30 seconds**	
		L4	45 seconds	
		L5	60 seconds	
		L6	80 seconds	
		L7	120 seconds	
		L8	180 seconds	

Otomatik Kapı Türkiye | Teknik destek: 0212 505 57 58
www.otomatikkapiturkiye.com.tr
Nice teknik dokümanı - Site bağlantısı Otomatik Kapı Türkiye tarafından eklenmiştir.

LEVEL 2 FUNCTIONS (ADJUSTABLE PARAMETERS)				
Entry LED	**Parameter**	**LED (level)**	**Set value**	**Description**
L2	**AUX input**	**L1**	**Type 1 partial open**	The control unit has an auxiliary input that can be configured with one of the following 6 functions. **Type 1 partial opening:** performs the same function as the STEP-BY-STEP input, triggering the opening of the upper leaf only. It only works with the gate fully closed, otherwise the command is interpreted as if it were a STEP-BY-STEP command. **Type 2 partial opening:** performs the same function as the STEP-BY-STEP input, triggering the opening of the two leaves for half the time it takes for full opening. It only works with the gate fully closed, otherwise the command is interpreted as if it were a STEP-BY-STEP command. **Open Only:** this input performs opening only with the Open-Stop-Open-Stop sequence. **Close Only:** this input performs closing only with the Close-Stop-Close-Stop sequence. **Photo 2:** performs the function of the “PHOTO 2” safety device. **Excluded:** this input does not manage any function.
		L2	Type 2 partial open	
		L3	Open only	
		L4	Close only	
		L5	Photo 2	
		L6	Stop (stops the manoeuvre)	
		L7	Excluded	
		L8	Excluded	
L3	**Motor speed**	L1	Open: 40%; Close: 40%	Adjusts the motor speed during normal travel.
		L2	Open: 60%; Close: 40%	
		L3	Open: 80%; Close: 40%	
		L4	Open: 80%; Close: 60%	
		L5	Open: 80%; Close: 80%	
		L6	**Open: 100%; Close: 60%**	
		L7	Open: 100%; Close: 80%	
		L8	Open: 100%; Close: 100%	
L4	**Motor discharge after closing**	**L1**	**No discharge**	Adjusts the duration of the “brief reversal” of both motors, after completing the closing manoeuvre, to reduce the residual final thrust.
		L2	0.2 seconds	
		L3	0.4 seconds	
		L4	0.6 seconds	
		L5	0.8 seconds	
		L6	1.0 seconds	
		L7	1.2 seconds	
		L8	1.4 seconds	
L5	**Motor force (amperometric sensitivity)**	L1	Level 1 - Minimum force	Adjusts the force of both motors. The control unit features a system that measures the current absorbed by the two motors and used to detect the mechanical limit switches and any obstacles during the gate’s movement. As the absorbed current depends on variable conditions (weight of the gate, sources of friction, wind gusts, voltage fluctuations, etc.), the intervention threshold can be modified. There are 8 levels: level 1 is the most sensitive level (minimum force), while level 8 is the least sensitive (maximum force). Increasing the degree of amperometric sensitivity increases the slowdown speed during the gate closing manoeuvre. **WARNING! – The suitably adjusted “amperometric” function (together with other indispensable arrangements) can be useful to ensure compliance with the EN 12453 and EN 12445 standards, which require the use of techniques or devices that limit the force and dangerousness associated with automatic door and gate movements.**
		L2	Level 2 - ...	
		L3	**Level 3 - ...**	
		L4	Level 4 - ...	
		L5	Level 5 - ...	
		L6	Level 6 - ...	
		L7	Level 7 - ...	
		L8	Level 8 - Maximum force	
L6	**Leaf delay**	L1	0%	Adjust the closing delay for the upper leaf motor. It is programmed as a percentage of the work time. The opening delay is half the time of the closing delay.
		L2	5%	
		L3	10%	
		L4	15%	
		L5	**20%**	
		L6	30%	
		L7	40%	
		L8	50%	

Otomatik Kapı Türkiye | Teknik destek: 0212 505 57 58
www.otomatikkapiturkiye.com.tr
Nice teknik dokümanı - Site bağlantısı Otomatik Kapı Türkiye tarafından eklenmiştir.

LEVEL 2 FUNCTIONS (ADJUSTABLE PARAMETERS)				
Entry LED	**Parameter**	**LED (level)**	**Set value**	**Description**
L7	**Maintenance notification**	L1	500	Adjusts the number of manoeuvres after which the automation maintenance request is triggered (see the "***Maintenance notification***" paragraph).
		L2	1000	
		L3	**1500**	
		L4	2500	
		L5	5000	
		L6	10000	
		L7	15000	
		L8	20000	
L8	**List of malfunctions**	**L1**	**Result of 1st manoeuvre (most recent)**	Allows for verifying the type of anomaly that occurred in the last 8 manoeuvres (see "***Anomaly log***" paragraph).
		L2	Result of 2nd manoeuvre	
		L3	Result of 3rd manoeuvre	
		L4	Result of 4th manoeuvre	
		L5	Result of 5th manoeuvre	
		L6	Result of 6th manoeuvre	
		L7	Result of 7th manoeuvre	
		L8	Result of 8th manoeuvre	

6.5 MEMORY DELETION

The procedure described below restores the control unit's default settings. All the custom settings will be lost.

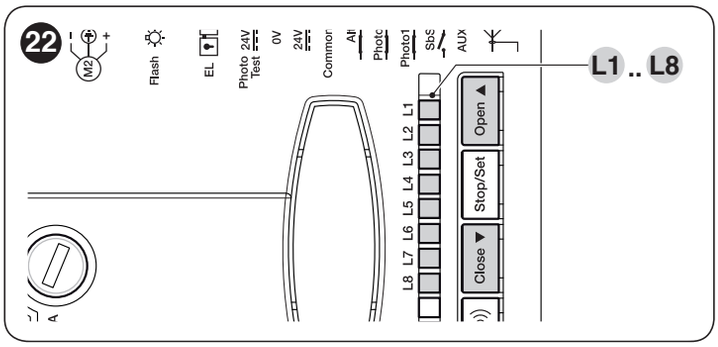

To delete the control unit's memory and restore all the default settings, proceed as described below:

1. press and hold the **[Open ▲]** and **[Close ▼]** buttons until the programming LEDs "**L1-L8**" light up (after roughly 3 seconds)
2. release the buttons
3. if the operation was successful, the programming LEDs "**L1-L8**" flash quickly for 3 seconds.

The following features will be deleted: STOP configuration, limit switch positions, Level 1 and Level 2 programming, number of manoeuvres. The memorised transmitters will not be deleted.

6.6 MEMORISING THE TRANSMITTERS

The control unit incorporates a radio receiver compatible with all transmitters that adopt the following NICE radio encoding protocols: **FLO**, **FLOR**, **O-CODE** and **SMILO**.

6.6.1 Procedure for memorising transmitter buttons

Among the available procedures for memorising transmitters, some allow for memorising in "standard" mode (or Mode 1) and others in "custom" mode (or Mode 2).

6.6.1.1 STANDARD memorisation (Mode 1: all buttons)

Procedures of this kind allow for simultaneously memorising, during their execution, **all the buttons** on the transmitter. The system automatically associates each button with a pre-defined command, according to the following scheme:

Table 9

TRANSMITTER FUNCTION PAIRINGS	
Command	**Button**
1 - Step-by-Step	Will be paired with button 1
2 - AUX	Will be paired with button 2
3 - OPEN	Will be paired with button 3
4 - CLOSE	will be paired with button 4 (if present on the transmitter).

6.6.1.2 CUSTOM memorisation (Mode 2: one button only)

Procedures of this kind allow for memorising, during their execution, a single button among those present on the transmitter. The following commands can be paired with the buttons: **Step-by-Step**, **AUX**, **OPEN**, **CLOSE**.
The installer decides which button to associate with the command on the basis of the automation's needs.

6.6.2 Number of transmitters that can be memorised

The control unit's receiver has 100 memory locations. A location can memorise either a single transmitter (i.e. the combination of its buttons and commands) or a single button with the relative command.

6.6.3 Transmitter memorisation and deletion procedures

To perform the procedures A, B, C and D described below, the control unit's memory must be unlocked. If the memory is locked, perform the unlocking procedure described in the "*LOCKING AND UNLOCKING THE MEMORY*" paragraph

Otomatik Kapı Türkiye | Teknik destek: 0212 505 57 58
www.otomatikkapiturkiye.com.tr
Nice teknik dokümanı - Site bağlantısı Otomatik Kapı Türkiye tarafından eklenmiştir.

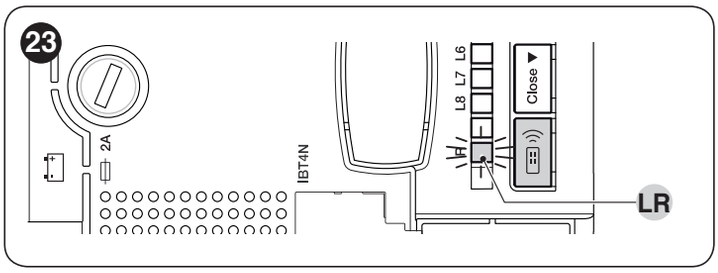

6.6.3.1 PROCEDURE A - Memorising ALL buttons of a single transmitter (STANDARD mode or Mode 1)

To perform this procedure:

1. **on the control unit:** press and hold the **[Radio ⌨•))]** button until the "**LR**" LED lights up
2. release the button **[Radio ⌨•))]**
3. (within 10 seconds) **on the transmitter to be memorised:** press and hold any button and wait until the "**LR**" LED emits 3 long flashes (= memorisation completed correctly)
4. release the transmitter button.

After the 3 long flashes a further 10 seconds remain to memorise an additional transmitter (if desired), starting from step 3.

The "LR" LED can also emit the following signals: 1 fast flash, if the transmitter is already memorised, 6 flashes, if the transmitter's radio encoding system is not compatible with that of the control unit's receiver, or 8 flashes, if the memory is full.

6.6.3.2 PROCEDURE B - Memorising a SINGLE BUTTON of a transmitter (CUSTOM mode or Mode 2)

To perform this procedure:

1. choose the command to be paired with the relevant button to be memorised:
   - for no. 1 - "Step-by-Step" press the **[Radio ⌨•))] button once**
   - for no. 2 - "AUX" press the **[Radio ⌨•))] button twice**
   - for no. 3 - "OPEN" press the **[Radio ⌨•))] button 3 times**
   - for no. 4 - "CLOSE" press the **[Radio ⌨•))] button 4 times**
2. **on the control unit:** press and release the **[Radio ⌨•))]** button for a number of times corresponding to the desired command, as shown near the command selected beforehand at step 1.
3. (within 10 seconds) **on the transmitter**: press and hold the button to be memorised and wait for the "**LR**" LED to emit 3 long flashes (= memorisation completed correctly)
4. release the transmitter button.

After the 3 long flashes a further 10 seconds remain to memorise an additional button (if desired), starting from step 1.

The "LR" LED can also emit the following signals: 1 fast flash, if the transmitter is already memorised, 6 flashes, if the transmitter's radio encoding system is not compatible with that of the control unit's receiver, or 8 flashes, if the memory is full.

6.6.3.3 PROCEDURE C - Memorising a transmitter by means of another transmitter already memorised (memorisation far from the control unit)

This procedure can be used to memorise a new transmitter by means of a second transmitter, already memorised in the same control unit. In this way, the new transmitter can receive the same settings as those of the memorised transmitter. The user does not have to intervene directly on the control unit's **[Radio ⌨•))]** button, as the procedure is simply carried out within the control unit's radius of reception.

To perform this procedure:

1. **on the transmitter to be memorised:** press and hold the button to be memorised
2. **on the control unit**: after a few seconds (roughly 5) the "**LR**" LED lights up
3. release the transmitter button
4. **on the transmitter already memorised:** press and slowly release 3 times the memorised button to be copied
5. **on the transmitter to be memorised:** press and hold the same button pressed at point 1 and wait for the "**LR**" LED to emit 3 long flashes (= memorisation completed correctly)
6. release the transmitter button.

The "LR" LED can also emit the following signals: 1 fast flash, if the transmitter is already memorised, 6 flashes, if the transmitter's radio encoding system is not compatible with that of the control unit's receiver, or 8 flashes, if the memory is full.

6.6.3.4 PROCEDURE D - Deleting a single transmitter (if memorised in Mode 1) or a single transmitter button (if memorised in Mode 2)

To perform this procedure:

1. **on the control unit:** press and hold the **[Radio ⌨•))] button**
2. after roughly 4 seconds, the "**LR**" LED will light up steady (continue holding down the **[Radio ⌨•))]** button
3. **on the transmitter to be deleted from the memory:** press and hold a button **(*)** until the "**LR**" LED (on the control unit) emits 5 fast flashes (or 1 flash if the transmitter or button is not memorised).
4. release the **[Radio ⌨•))]** button.

(*) If the transmitter is memorised in **Mode 1**, any button can be pressed and the control unit will delete the entire transmitter. If the transmitter is memorised in **Mode 2**, it is necessary to press the memorised button to be deleted. To delete further buttons memorised in Mode 2, repeat the entire procedure for every button to be deleted.

6.6.3.5 PROCEDURE E - Deleting ALL memorised transmitters

To perform this procedure:

1. **on the control unit:** press and hold the **[Radio ⌨•))] button**
2. after roughly 4 seconds, the "**LR**" LED will light up steady (continue holding down the **[Radio ⌨•))]** button
3. after roughly 4 seconds, the "**LR**" LED will turn off (continue holding down the **[Radio ⌨•))]** button
4. when the "**LR**" LED starts flashing, count 2 flashes and prepare to release the button precisely during the 3rd flash that follows
5. during the deletion process, the "**LR**" LED will flash rapidly
6. the "**LR**" LED will emit 5 long flashes to signal that the deletion has been completed correctly.

Otomatik Kapı Türkiye | Teknik destek: 0212 505 57 58
www.otomatikkapiturkiye.com.tr
Nice teknik dokümanı - Site bağlantısı Otomatik Kapı Türkiye tarafından eklenmiştir.

6.7 LOCKING AND UNLOCKING THE MEMORY

WARNING! - This procedure locks the memory, preventing the execution of Procedures A, B, C and D described in the "*Transmitter memorisation and deletion procedures*" paragraph

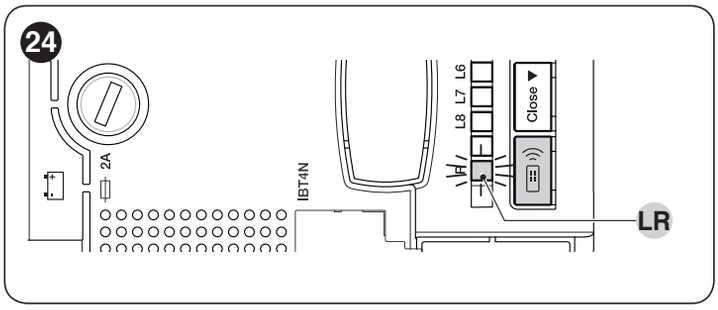

Procedure for locking/unlocking the memory:

1. disconnect the control unit from the power supply
2. press and hold the **[Radio ⌨)] button**
3. power the control unit again (by pressing down the **[Radio ⌨)]** button)
4. after 5 seconds the "**LR**" LED will emit 2 slow flashes
5. release the button **[Radio ⌨)]**
6. (within 5 seconds) repeatedly press the **[Radio ⌨)]** button to select one of the following options:
   - disabling of the memory lock function = **LED off**
   - enabling of the memory lock function = **LED on**
7. five seconds after last pressing the button, the "**LR**" LED will emit 2 slow flashes to signal the end of the procedure.

7 TROUBLESHOOTING... (troubleshooting guide)

Some devices are configured for signalling the operating status or the presence of any anomalies.

7.1 SIGNALLING THROUGH WARNING LIGHT

If a warning light is connected to the FLASH output on the control unit, the light will flash once every 1 second while the manoeuvre is being performed.
If any anomalies occur, the warning light will emit slow flashes repeated twice with a 1-second interval. "***Table 10***" describes the cause and possible solutions for each type of anomaly signalled by the warning light.
In case of anomaly, the "**OK**" LED will also emit signals. "***Table 10***" describes the cause and possible solutions for each type of anomaly signalled by the "**OK**" LED.

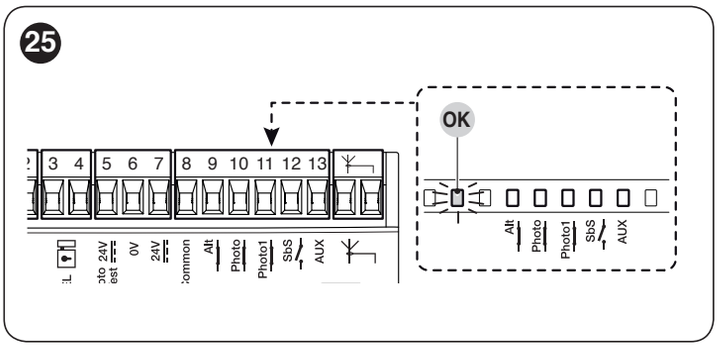

Table 10

SIGNALS EMITTED BY THE OK LED ("*FIGURE 25*") AND WARNING LIGHT		
Flashes	**Anomaly**	**Possible solution**
2 short red flashes 1-second pause 2 short red flashes	**Intervention of a photocell**	One or more photocells do not consent to the movement or have caused the latter to reverse. Check for any obstacles.
3 short red flashes 1-second pause 3 short red flashes	**Intervention of the "Obstacle Detection" function through the force limiter**	During the gate's movement, the motors encountered more resistance. Verify the cause and increase the motor force if necessary.
4 short red flashes 1-second pause 4 short red flashes	**Intervention of the ALT (STOP) input**	At the start of the manoeuvre or during the movement itself, the ALT (STOP) input intervened. Identify the cause.
5 short red flashes 1-second pause 5 short red flashes	**Error in the internal parameters of the control unit**	Wait at least 30 seconds then try giving a command and disconnect the power supply if necessary. If the condition persists, there may be a serious malfunction and the electronic board needs to be replaced.
6 short red flashes 1-second pause 6 short red flashes	**The maximum limit for consecutive manoeuvres or manoeuvres per hour has been exceeded**	Wait for a few minutes until the manoeuvre limiting device drops to under the maximum limit.
7 short red flashes 1-second pause 7 short red flashes	**Electric circuit anomaly**	Wait at least 30 seconds then try giving a command and disconnect the power supply if necessary. If the condition persists, there may be a serious malfunction and the electronic board needs to be replaced.
8 short red flashes 1-second pause 8 short red flashes	**A command that prevents other commands from being executed is already present**	Check the type of the "always present" command (for example, it could be a command from a clock on the AUX input).

Otomatik Kapı Türkiye | Teknik destek: 0212 505 57 58
www.otomatikkapiturkiye.com.tr
Nice teknik dokümanı - Site bağlantısı Otomatik Kapı Türkiye tarafından eklenmiştir.

7.2 SIGNALS ON THE CONTROL UNIT

The control unit has LEDs "**L1-L8**" on the buttons and LEDs "**L9-L13**" and the "**OK**" LED on the control unit terminals ("***Figure 26***").
Each of these LEDs can emit special signals, both during normal operation and in case of anomalies. "***Table 11***" and "***Table 12***" describe the cause and possible solution for every type of anomaly.

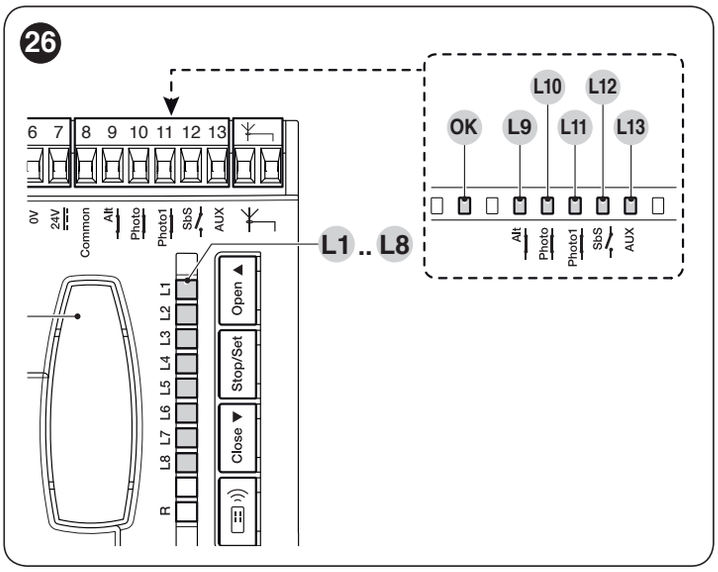

Table 11

SIGNALS OF THE LED ON THE CONTROL UNIT TERMINALS		
Status	**Meaning**	**Possible solution**
All LEDs		
No LED is lit	**No power to the control unit**	Check whether the control unit is powered: measure on terminals 6-7 a voltage of roughly 30 VDC (or 24 VDC if battery-powered). Check the 2 fuses; if the OK LED is also not lit nor flashes, there may be a serious fault, therefore the control unit must be replaced.
OK LED		
OFF	**Anomaly**	Make sure there is power supply; verify whether the fuses are blown; if necessary, identify the reason for the failure then replace the fuses with others of the same type
On	**Serious anomaly**	There is a serious anomaly; try switching off the control unit for a few seconds; if the condition persists, it means there is a fault and the circuit board needs to be replaced
1 flash per second	**All OK**	The control unit works normally
1 flash every 5 seconds	**All OK**	Control unit in stand-by mode
2 quick flashes	**The status of the inputs has changed**	This is normal when there is a change affecting one of the inputs: OPEN, STOP, intervention of the photocells, or when the radio transmitter is used
Series of flashes separated by a one-second pause	**Various**	This is the same signal as the one on the warning light (see "***Table 10***")
STOP LED		
OFF	**Intervention of the ALT (STOP) input**	Check the devices connected to the STOP input
On	**All OK**	STOP Input active
PHOTO LED		
OFF	**Intervention of the PHOTO input**	Check the devices connected to the PHOTO input
On	**All OK**	PHOTO input active
PHOTO1 LED		
OFF	**Intervention of the PHOTO1 input**	Check the devices connected to the PHOTO1 input
On	**All OK**	PHOTO1 input active
Sbs LED		
OFF	**All OK**	Sbs input not active
On	**Intervention of the Sbs input**	Normal if the device connected to the Sbs input is active
AUX LED		
OFF	**All OK**	AUX input not active
On	**Intervention of the AUX input**	Normal if the device connected to the AUX input is active

Otomatik Kapı Türkiye | Teknik destek: 0212 505 57 58
www.otomatikkapiturkiye.com.tr
Nice teknik dokümanı - Site bağlantısı Otomatik Kapı Türkiye tarafından eklenmiştir.

Table 12

SIGNALS OF THE LED ON THE CONTROL UNIT BUTTONS	
Status	**Meaning**
L1 LED	
OFF	During normal operation, it signals that the “Automatic closing” mode is not active
On	During normal operation, it signals that the “Automatic closing” mode is active
Flashes	Function programming in progress
L2 LED	
OFF	During normal operation, it signals that the “Close after photo” mode is not active
On	During normal operation, it signals that the “Close after photo” mode is active
Flashes	Function programming in progress
L3 LED	
OFF	During normal operation, it signals that the “Always Close” mode is not active
On	During normal operation, it signals that the “Always Close” mode is active
Flashes	Function programming in progress. If it flashes together with LED L4, the position recognition phase must be carried out (see the “***Automatic limit switch search and “STOP” input acquisition***” paragraph)
LED L4	
OFF	During normal operation, it signals that the “Stand-by” mode is active
On	During normal operation, it signals that the “Phototest” mode is active
Flashes	Function programming in progress. If it flashes together with LED L3, the position recognition phase must be carried out (see the “***Automatic limit switch search and “STOP” input acquisition***” paragraph)
LED L5	
OFF	During normal operation, it signals the OGI output as OGI (open gate indicator)
On	During normal operation, it signals the OGI output as ELS (electric lock)
Flashes	Function programming in progress
LED L6	
OFF	During normal operation it signals that the “Pre-flashing” mode is not active
On	During normal operation it signals that the “Pre-flashing” mode is active
Flashes	Function programming in progress
LED L7	
OFF	During normal operation, it signals that the “Condominium” mode is not active
On	During normal operation, it signals that the “Condominium” mode is active
Flashes	Function programming in progress
LED L8	
OFF	During normal operation, it signals that the “Light gates” mode is active
On	During normal operation, it signals that the “Heavy gates” mode is active
Flashes	Function programming in progress

7.3 MAINTENANCE NOTIFICATION

The control unit allows for notifying the user when to perform maintenance on the automation. The signal is emitted once the number of manoeuvres completed equals the value set for the “Maintenance warning” adjustable parameter (see the “***Table 8***” paragraph).
The maintenance request signal is emitted through the FLASH warning light.
The FLASH warning light and the maintenance indicator emit the signals indicated in “***Table 13***” based on the number of manoeuvres completed with respect to the set limit.

Table 13

MAINTENANCE SIGNALS		
Number of manoeuvres	**Signal on “Flash”**	**Signal on maintenance indicator**
Below 80% of the limit	**Normal (0.5 s on, 0.5 s off)**	On for 2 s at the start of opening
Between 81% and 100% of the limit	**At the start of the manoeuvre, it remains lit for 2 s then continues normally**	Flashes throughout the manoeuvre
Over 100% of the limit	**At the start and end of the manoeuvre, remains lit for 2 s then continues normally**	Flashes always

7.4 ANOMALY LOG

The control unit can display any anomalies that have occurred in the last 8 manoeuvres (for example, the interruption of a manoeuvre due to the intervention of a photocell or sensitive edge).

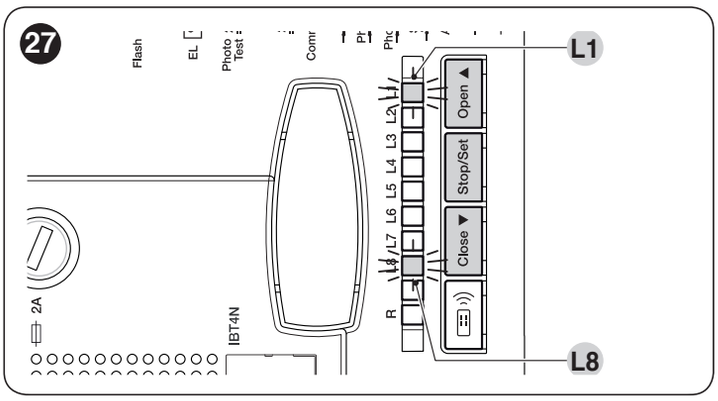

To check the list of anomalies:

1. press and hold the **[Stop/Set]** button for roughly 3 seconds
2. release the **[Stop/Set]** button when the “**L1**” LED starts flashing
3. press and release the **[Open ▲]** or **[Close ▼]** button to shift flashing of the LED to “**L8**” (“Anomaly list” parameter)
4. keep the **[Stop/Set]** button pressed down (it must be kept pressed throughout phases 5 and 6)
5. wait roughly 3 seconds, after which LED “**L1**” – corresponding to the outcome of the last manoeuvre – will light up
6. press and hold the **[Open ▲]** or **[Close ▼]** button to select the desired manoeuvre: the corresponding LED will emit the same number of flashes as those normally emitted by the warning light after an anomaly (see “***Table 10***”)
7. release the **[Stop/Set]** button.

Otomatik Kapı Türkiye | Teknik destek: 0212 505 57 58
www.otomatikkapiturkiye.com.tr
Nice teknik dokümanı - Site bağlantısı Otomatik Kapı Türkiye tarafından eklenmiştir.

8 FURTHER INFORMATION (Accessories)

8.1 CONNECTING AN SM-TYPE RADIO RECEIVER

The control unit has a slot for mounting radio receivers with SM connector (optional accessories) belonging to the SMXI and OXI families, which can be used to remotely control the control unit through transmitters that intervene on the unit's inputs.

Before installing a receiver, disconnect the power supply to the control unit.

To install a receiver ("***Figure 28***"):

1. remove the cover of the control unit's containment box
2. insert the receiver (**A**) in the appropriate slot (**B**) on the control unit's electronic board
3. put the cover of the control unit's containment box back on.

At this stage, the control unit can be powered again.

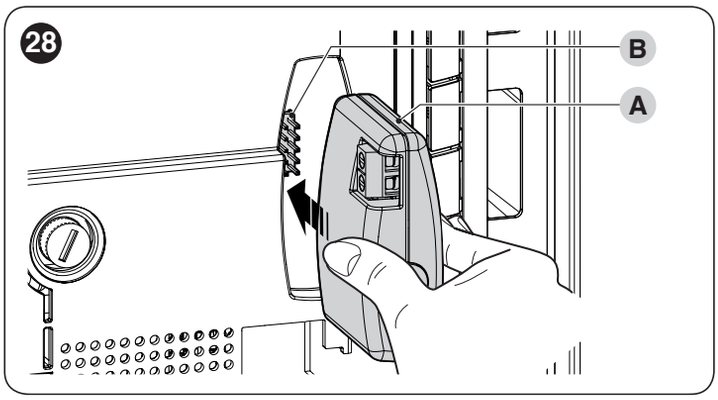

"***Table 14***" shows the receiver outputs and the control unit inputs associated with each.

Table 14

SMXI / SMXIS OR OXI / OXIFM / OXIT / OXITFM IN MODE 1 OR MODE 2	
Receiver output	**Control unit input**
Output No. 1	Step-by-Step
Output No. 2	AUX (pre-set value: Partial open 1)
Output No. 3	"Open Only"
Output No. 4	"Close Only"

For further information, consult the specific manual of the receiver.

8.2 CONNECTING THE IBT4N INTERFACE

The control unit is equipped with a "IBT4N"-type connector for the IBT4N interface, which allows for connecting all devices equipped with BusT4 interface, such as, for example, Oview programmers and the IT4WIFI Wi-Fi interface.
The Oview programmer allows for comprehensively and rapidly managing the installation, maintenance and diagnosis of the entire automated system.

Before connecting the interface, disconnect the power supply to the control unit.

To install the interface ("***Figure 29***"):

1. remove the cover of the control unit's containment box
2. place the interface (**A**) in the appropriate slot (**B**) on the control unit's electronic board
3. insert the cable (**C**) in the appropriate slot (**D**) on the interface.

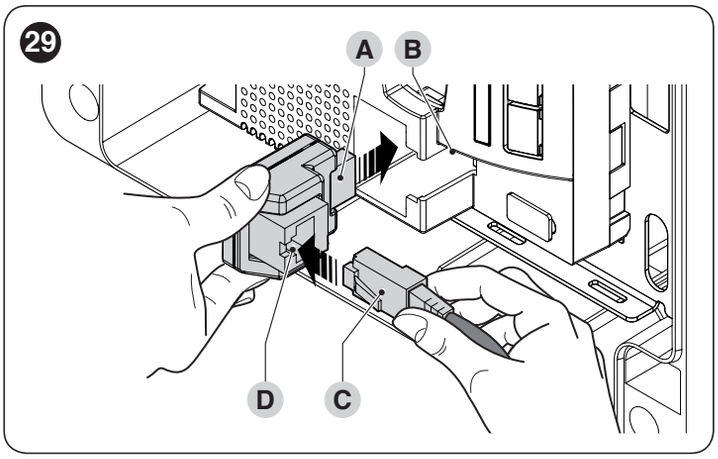

At this stage, the control unit can be powered again.

For further information, consult the specific manuals of the connected devices.

8.3 CONNECTING THE PS124 BACK-UP BATTERY

The control unit is configured for being powered with PS124 back-up batteries that intervene in case of a power outage.

Before installing a back-up battery, disconnect the power supply to the control unit.

Before installing and connecting the back-up battery:

1. remove the cover of the control unit's containment box
2. loosen the screw (**A**) and turn the panel (**B**)

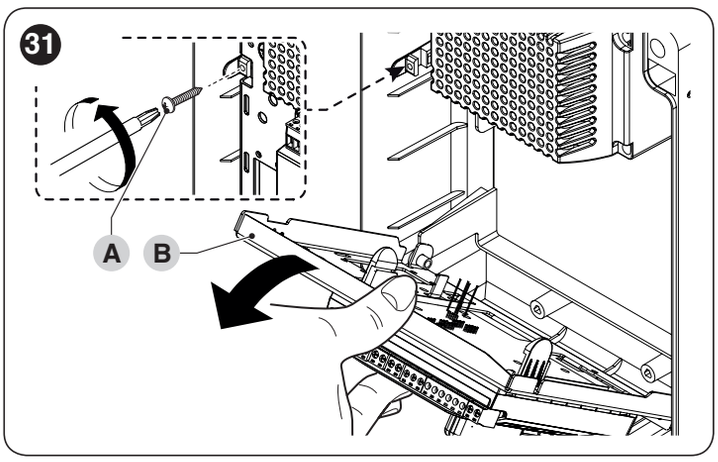

Otomatik Kapı Türkiye | Teknik destek: 0212 505 57 58
www.otomatikkapiturkiye.com.tr
Nice teknik dokümanı - Site bağlantısı Otomatik Kapı Türkiye tarafından eklenmiştir.

3. position the battery (**C**)
4. insert the connector (**D**) through the opening (**E**) and connect it to the slot (**F**)
5. close the panel (**B**)

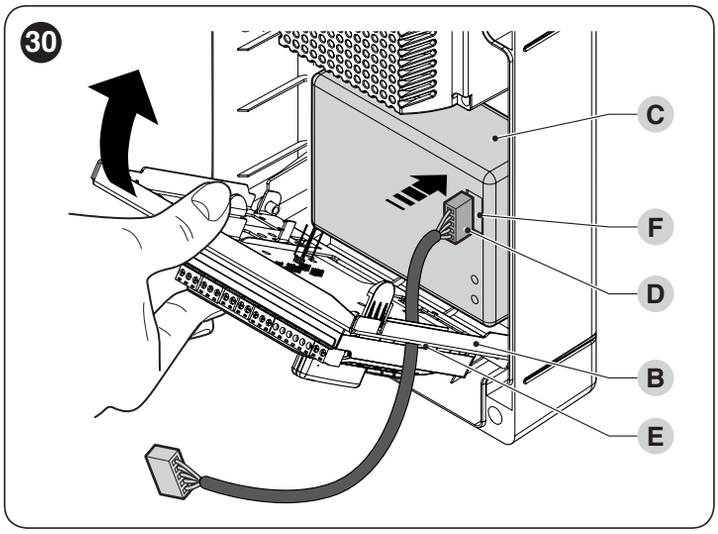

6. remove the pre-cut element (**G**) and insert the connector (**H**) into the slot located under the pre-cut element

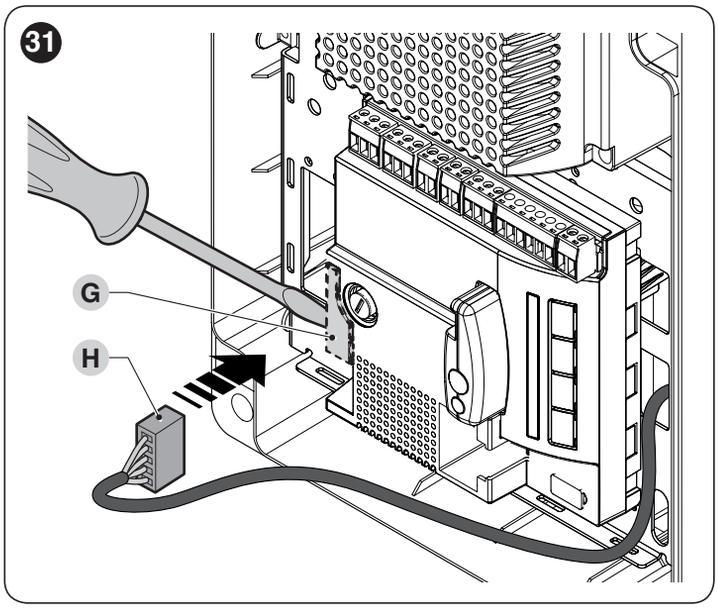

7. put the cover of the control unit's containment box back on.

At this stage, the control unit can be powered again.

8.4 CONNECTING THE SOLEMYO SYSTEM

The control unit is configured for being powered with the "Solemyo" photovoltaic system (photovoltaic panel and 24 V battery). To connect the Solemyo battery to the control unit, remove the pre-cut element (**A**) and use the same connector normally used for the back-up battery.

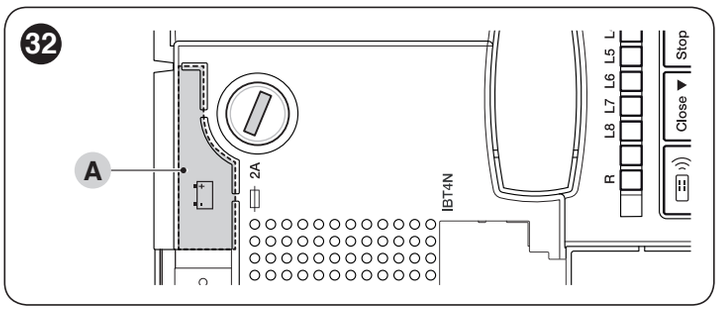

When the automation is powered through the "Solemyo" system, IT MUST NOT BE POWERED through the mains electricity at the same time.

The "Solemyo" system can only be used if the "Stand-by all" function is enabled (ON) on the control unit and if the connections are made as shown in the diagram (A) in "*Figure 7*".

9 PRODUCT MAINTENANCE

Being an electronic part, the control unit does not require any special maintenance. Nonetheless, the system should be regularly checked to ensure that it works efficiently at least every 6 months according to the instructions in the "***TESTING AND COMMISSIONING***" chapter.

10 PRODUCT DISPOSAL

This product is an integral part of the operator and must therefore be disposed of with it.

As with the installation, only qualified personnel must dismantle the product at the end of its life.
This product is composed of different types of materials. Some of these materials can be recycled; others must be disposed of. Please enquire about the recycling or disposal systems in place in your local area for this type of product.

WARNING

Some parts of the product may contain polluting or dangerous substances. If not disposed of correctly, these substances may have a damaging effect on the environment and human health.

As indicated by the symbol shown here, this product must not been disposed of with household waste. Separate the waste for disposal and recycling, following the methods stipulated by local regulations, or return the product to the seller when purchasing a new product.

WARNING

Local regulations may impose heavy penalties if this product is not disposed of in compliance with the law.

Otomatik Kapı Türkiye | Teknik destek: 0212 505 57 58
www.otomatikkapiturkiye.com.tr
Nice teknik dokümanı - Site bağlantısı Otomatik Kapı Türkiye tarafından eklenmiştir.

11 TECHNICAL SPECIFICATIONS

All technical specifications stated in this section refer to an ambient temperature of 20°C (± 5°C). Nice S.p.A. reserves the right to apply modifications to the product at any time when deemed necessary, without altering its functions and intended use.

Table 15

TECHNICAL SPECIFICATIONS	
Description	**Technical specification**
Mains power supply	Control unit MC424L: 230 V∼ ± 10% 50–60 Hz; fuse: 1A type T Control unit MC424L/V1: 120 V∼ ± 10% 50–60 Hz; fuse: 2A type T Control unit MC424L/AU01: 250 V∼ ± 10% 50–60 Hz; fuse: 1A type T
Maximum power input	170 W
Emergency power supply	configured for PS124 back-up batteries and for the Solemyo solar power kit
Maximum motor current	3 A (with “level 6” amperometric device intervention)
Services power output	24 V⎓ maximum current 200 mA (the voltage may vary between 16 V and 33 V⎓)
Phototest output	24 V⎓ maximum current 100 mA (the voltage may vary between 16 V and 33 V⎓)
Warning light output	for 24 V ⎓ warning lights, maximum power 25 W (the voltage may vary between 16 V and 33 V⎓); for Nice ELDC and EL24 warning lights
Electric lock output	for 24 V ⎓ lamps, maximum power 5 W (the voltage may vary between 16 V and 33 V ⎓) or for 12 V ∼ electric locks, 15 VA
ALT (STOP) input	for NC contacts or 8.2 kΩ fixed resistor +/– 25%
Work time	measured automatically
Pause time	settable
Discharge time	settable
Leaf opening delay	settable
Leaf closing delay	measured automatically
1st motor output	for WINGO motors (WG2024, WG3524, WG4024, WG5024), TOO (TOO3024, TOO4524), SFAB (XME2024)
2nd motor output	for WINGO motors (WG2024, WG3524, WG4024, WG5024), TOO (TOO3024, TOO4524), SFAB (XME2024)
Max length of cables	power supply: 30 m
	Solemyo solar kit power supply: 3 m
	motors: 10 m
	other inputs/outputs: 30 m
	warning light: 10 m
	OGI: 30 m
	electric lock: 10 m
	antenna: 20 m (**recommended below 3 m**)
Radio receiver	“SM”-type connector for SMXI, SMXIS, OXI receivers (Mode 1 and Mode 2)
Operating temperature	from –20°C to +55°C
Protection rating	IP 54 (with container intact)
Dimensions (mm)	310 x 232 x H 122
Weight (kg)	4,1

12 CONFORMITY

EU Declaration of Conformity

and declaration of incorporation of “partly completed machinery”

Note - The contents of this declaration correspond to declarations in the official document deposited at the registered offices of Nice S.p.a. and in particular to the last revision available before printing this manual. The text herein has been re-edited for editorial purposes. A copy of the original declaration can be requested from Nice S.p.a. (TV) I.

Number: 296/MC424 **Rev:** 5 **Language:** EN

Manufacturer’s Name: Nice s.p.a.
Address: Via Pezza Alta 13, Z.I. Rustignè, 31046 Oderzo (TV) Italy
Authorized Person to constitute technical documentation: Nice s.p.a.
Type of product: Comand central a 2 motor 24V dc
Model/Type: MC424, MC424L
Accessories: Refer to the catalog

The undersigned Roberto Griffa, in the role of Chief Executive Officer, declares under his sole responsibility that the product described above complies with the provisions laid down in the following directives:

• Directive 2014/30/EU (EMC), according to the following harmonized standards: EN 61000-6-2:2005, EN 61000-6-3:2007+A1:2011

The product also complies with the following directives according to the requirements envisaged for “partly completed machinery” (Annex II, part 1, section B):

• Directive 2006/42/EC of the EUROPEAN PARLIAMENT AND COUNCIL of 17 May 2006 related to machinery and amending the Directive 95/16/EC (recast).

It is hereby stated that the relevant technical documentation has been compiled in accordance with annex VII B of Directive 2006/42/EC and that the following essential requirements have been fulfilled: 1.1.1 - 1.1.2 - 1.1.3 - 1.2.1 - 1.2.6 - 1.5.1 - 1.5.2 - 1.5.5 - 1.5.6 - 1.5.7- 1.5.8 - 1.5.10 - 1.5.11
The manufacturer undertakes to transmit to the national authorities, in response to a reasoned request, the relevant information on the “ partly completed machinery “, while maintaining full rights to the related intellectual property.
Should the “ partly completed machinery” be put into service in a European country with an official language other than that used in this declaration, the importer is obliged to arrange for the relative translation to accompany this declaration.
The “partly completed machinery” must not be used until the final machine in which it is incorporated is in turn declared as compliant, if applicable, with the provisions of directive 2006/42/EC.

The product also complies with the following standards:
EN 60335-1:2012+A11:2014, EN 62233:2008, EN 60335-2-103:2015

Ing. Roberto Griffa
(Chief Executive Officer)

Oderzo, 05/09/2017

Otomatik Kapı Türkiye | Teknik destek: 0212 505 57 58
www.otomatikkapiturkiye.com.tr
Nice teknik dokümanı - Site bağlantısı Otomatik Kapı Türkiye tarafından eklenmiştir.

INSTRUCTIONS AND WARNINGS FOR THE USER

Before using the automation for the first time, ask the installer to explain the origin of any residual risks and take a few minutes to read this instruction manual and warnings for the user given to you by the installer. Store the manual for future reference and hand it to the new owner when transferring the automation.

WARNING!

Your automation is a machine that faithfully executes commands imparted by the user. Negligence and improper use may lead to dangerous situations:

- do not manoeuvre the gate if there are people, animals or objects within its range of operation
- it is strictly forbidden to touch parts of the automation while the gate or door is moving
- the photocells are not a safety device but only an auxiliary aid to safety. They are built using highly reliable technology but, in extreme conditions, may malfunction or even become defective. In certain cases, the defect may not be clearly evident. For these reasons, it is important to follow all the instructions given in this manual when using the automation
- periodically check that the photocells work properly.

IT IS STRICTLY FORBIDDEN to transit through the gate while it is closing! It is only possible to transit through the gate when it is fully open and the leaves are at a standstill.

CHILDREN

An automation system guarantees a high degree of safety. With its detection systems, it can control and guarantee the gate's movement in the presence of people or objects. It is nonetheless advisable to forbid children from playing near the automation and not to leave remote controls near them to prevent any unwanted activation of the system. The automation is not a toy!

The product is not intended for use by persons, including children, with limited physical, sensory or mental capacities, or who lack experience or knowledge, unless supervised or trained in the use of the product by a person responsible for their safety.

Anomalies: if the automation appears to behave strangely, disconnect the power supply to the automation and manually unlock the motor (consult the respective instruction manual) to manoeuvre the gate manually. Do not perform any repairs personally, but contact your trusted installer.

Do not modify the system or the programming and adjustment parameters of the control unit: your installer is exclusively responsible for these operations.

Failure or power outage: while waiting for your installer to intervene or the power supply to be restored, if the system is not equipped with back-up batteries, the automation can be used by manually unlocking the motor (consult the relative instruction manual) and manually moving the gate leaf.

Safety devices out of order: the automation can also be used when one or more safety devices are defective or out of order. The gate can be operated in the "**Person present**" mode in the following way:

1. send a command to operate the gate, with a transmitter or key selector, etc. If everything works properly, the gate will move normally, otherwise proceed as described below
2. within 3 seconds, press the control again and hold it down
3. after roughly 2 seconds, the gate will move in the "**Person present**" mode, in other words, it will continue moving so long as the control is held down.

If the safety devices are out of order, have the system repaired as soon as possible by a qualified technician.

The test, periodic maintenance and any repairs must be documented by the person carrying out the work and the documents must be stored by the owner of the automation. The only interventions the user may carry out periodically include cleaning of the photocell glass components (use a soft and slightly damp cloth) and removing any leaves or stones that may obstruct the automation.

The user of the automation must manually unlock the motor before starting any maintenance operation, to prevent other people from accidentally manoeuvring the gate (consult the respective instruction manual).

Maintenance: in order to ensure constant levels of safety and the longest useful life for the automation, routine maintenance must be carried out (at least every 6 months).

Only qualified personnel is authorised to carry out checks, maintenance operations and repairs.

Disposal: at the end of its useful life, the automation must be dismantled by qualified personnel and the materials must be recycled or disposed of in compliance with the local regulations in force.

If the automation was locked using the "Lock automation" command, the gate will not move when a command is sent and the warning light will emit 9 short flashes.

Otomatik Kapı Türkiye | Teknik destek: 0212 505 57 58
www.otomatikkapiturkiye.com.tr
Nice teknik dokümanı - Site bağlantısı Otomatik Kapı Türkiye tarafından eklenmiştir.

NOTES

Otomatik Kapı Türkiye | Teknik destek: 0212 505 57 58
www.otomatikkapiturkiye.com.tr
Nice teknik dokümanı - Site bağlantısı Otomatik Kapı Türkiye tarafından eklenmiştir.

NOTES

Otomatik Kapı Türkiye | Teknik destek: 0212 505 57 58
www.otomatikkapiturkiye.com.tr
Nice teknik dokümanı - Site bağlantısı Otomatik Kapı Türkiye tarafından eklenmiştir.

IDV06619A00EN_31-01-2019

Nice SpA
Via Pezza Alta, 13
31046 Oderzo TV Italy
info@niceforyou.com

www.niceforyou.com

Otomatik Kapı Türkiye | Teknik destek: 0212 505 57 58
Nice teknik dokümanı - Site bağlantısı Otomatik Kapı Türkiye tarafından eklenmiştir.
www.otomatikkapiturkiye.com.tr